ROOFING INSTALLATION GUIDE

EDCO®

June 2025

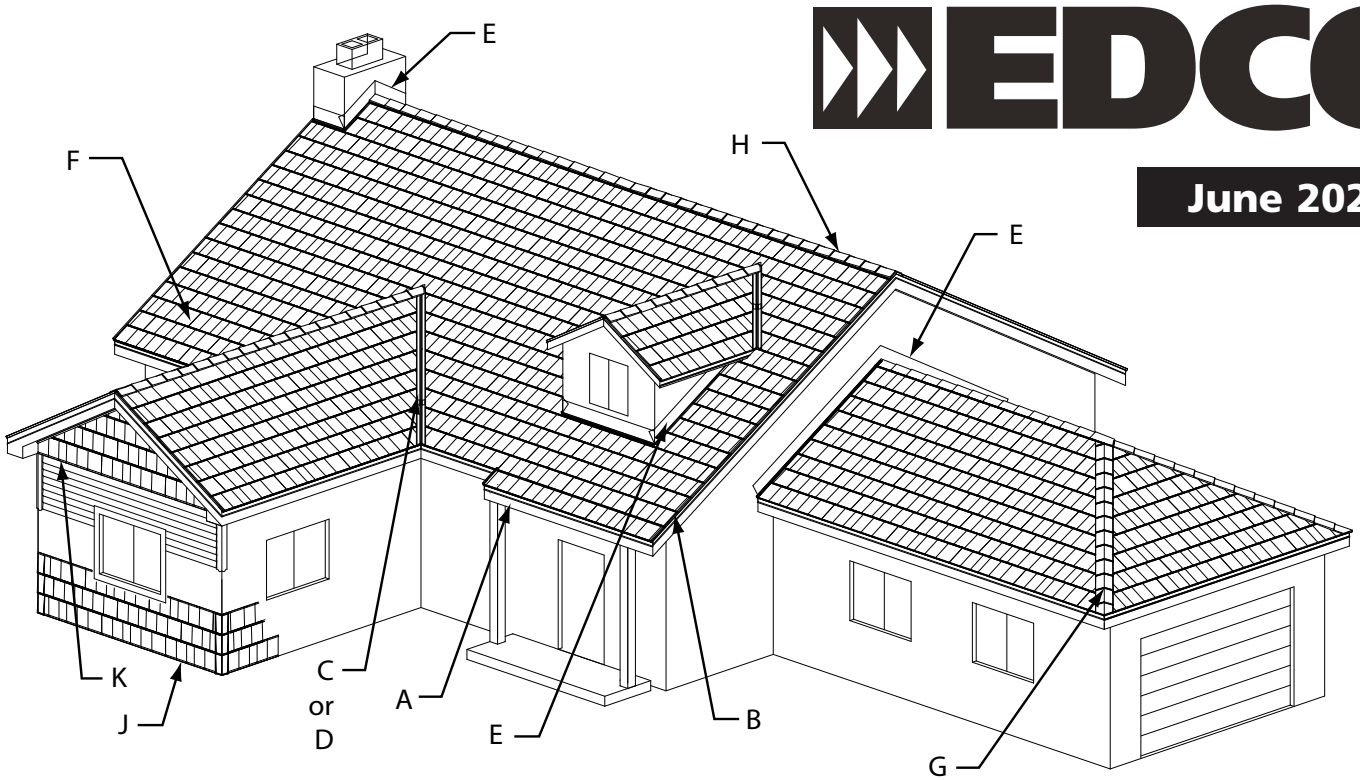

DETAIL	DESCRIPTION	PAGE
	Preparation and General Conditions	2
	Panel installation sequence procedure	3
	General underlayment instructions	3
A	Eave Starter	4
B	Gable Edge w/ Rollover (Rake Starter option)	5
C	Open Valley Assembly	6
D	Closed Valley Assembly	7
E	Side Wall Flashing (Chimney Flashing option)	8
	Head Wall Flashing	9
F	Steel Shingle-Shake / Slate and Shingle Clip	10
	Sno Gem Installation	11
G	Hip and Ridge Assembly (non-vented)	12
H	Hip and Ridge Assembly (vented)	13
	Ridge & Soffit Ventilation Requirements	14
	Roof Vent Flashing	15
	Pipe Vent Flashing	15
J	Side Wall Installation Drawings (Side wall corner, shake to shake detail)	16
K	Side Wall Step-by-Step Instructions	17
	Roof Jack	18
	Roofing Estimate Guide	19
	Español Instrucciones	20
	Roofing and Accessories Parts List	24

ROOFING PREPARATION AND GENERAL CONDITIONS*

1. Installation of EDCO Metal Roofing Panels per the instructions in this guide are recommended to achieve results within QAI Code Evaluation Report CERus-1037.
2. Cartons should be stored in dry place under cover. Carry only one carton at a time and avoid having loose pieces on the roof.
3. Follow all workers compensation and OSHA safety guidelines.
4. Minimum recommended roof pitch is 4/12.
5. EDCO Metal roofing panels must be installed on minimum 15/32” Plywood or OSB, attachment of sheathing to the roof deck must comply with applicable build codes.
6. Inspect all roof sheathing and framing to make sure that it is free of warping, in good condition and fastened properly.
7. When re-roofing determine if existing roofing needs to be removed. Before installing new shakes/slate over existing asphalt shingles, remove any mouldings on fascia board, cut back existing shingles flush with the fascia board at all roof edges and then install an underlayment.
8. The underlayment material must be applied directly over the sheathing or existing roof and underneath the new ArrowLine Roofing Shingles. Class A/B/C fire rated assemblies can be achieved using the following underlayment product per QAI Code Evaluation Report CERus-1037:
   - Class "A" fire rating can be achieved by covering the entire roof area with Georgia-Pacific 1/4" Densdeck®, one layer of Type G3 mineral-surfaced cap sheet, or two layers of GAF VersaShield® installed on minimum 15/32-inch plywood.
   - Class "A" fire rating can also be achieved by covering the entire roof area with one layer of Eco Chief SOLARHIDE™ underlayment installed on minimum 15/32-inch plywood or OSB.
   - Class "B" fire rating can be achieved by covering the entire roof area with one layer of GAF VersaShield® installed on minimum 15/32-inch plywood.

   Reference QAI Code Evaluation Report CERus-1037 for full assembly details.
9. The entire roof must be covered with an underlayment prior to installing shakes/slate. The underlayment should be selected based on climatic weather conditions and must comply with all local building codes. A synthetic underlayment or #30 felt can be used with double layers at the eaves edge to a point at least 24" inside the exterior wall line, 18" on each side of the centerline along the entire length of the valley and around openings. The underlayments are to be overlapped according to manufacturer's recommendations and/or local building codes.
10. In weather climates that experience freezing temperatures and high winds it would be advisable to use a high temperature, non granule coated polymer modified bitumen ice and water shield in lieu of the bottom layer of doubled underlayment and possibly throughout the entire job. High temperature ice and water shield is recommended for new construction as is following the manufacturer’s recommendations. Follow local building codes.
11. Proper attic ventilation is necessary. Using venting hip, ridge and soffit panels are an excellent way to ventilate the attic. See page 3 for details on preparing the roof and page 11 for installing the hip and ridge vents.
12. When walking on roof always wear soft soled shoes or foam rubber soled overshoes and stay close to the top of the shake/slate just under the butt projection where the shake/slate is closest to under support. Always avoid walking on the four way interlock of the shake/slate. Recommended scaffolding methods should always be adhered to.
13. Architects, contractors, and roofing installers must ensure that construction bylaws and building codes are complied with and approved. Before construction begins, building permits may need to be obtained from the local building department. To qualify for protection under the manufacturer’s warranty, the application instructions herein must be followed.
14. Contact EDCO Products, Inc. for testing details: UL 580/TAS 125 - Wind Uplift Resistance; UL 2218/FM4473 - Hail Impact Resistance; ASTM E108 Roof Fire Classification; FL4077-Florida Building Commission; QAI CERus-1037.
15. Use OSHA approved fall protection equipment when working on any roof.
16. * THIS INSTALLATION GUIDE IS INTENDED TO BE A REFERENCE FOR INSTALLING OUR ROOFING PRODUCTS, BUT DUE TO SPACE LIMITATIONS WE ARE ONLY SHOWING THE MORE COMMON WAYS TO APPLY THE ROOFING AND ACCESSORIES. THERE MAY BE MORE WAYS THAT ARE ACCEPTABLE THAT ARE NOT SHOWN HERE FOR INSTALLING THE ROOFING PRODUCTS. IF YOU HAVE ANY QUESTIONS PLEASE DISCUSS THEM WITH YOUR CONTRACTOR. EDCO PRODUCTS, INC. ASSUMES NO RESPONSIBILITY FOR LEAKS OR OTHER ROOFING DEFECTS DUE TO FAULTY APPLICATION. EDCO ROOFING PRODUCTS ARE COVERED BY A LIFETIME LIMITED WARRANTY. FOR A COPY OF THE WARRANTY CALL 800 - 333 - 2580. OR YOUR LOCAL DEALER. USE A PROFESSIONAL CONTRACTOR FOR INSTALLATION OF YOUR EDCO ROOF.

Shake/Slate installation sequence procedure

For new construction, it is recommended to use a high temperature, non-granule coated ice and water shield instead of #30 felt paper. The high temperature ice and water shield seals around screws and nails and is a final water barrier where there are conditions of heavy driving rain and ice dams. Refer to underlayment manufacturer's instructions and local building codes.

1. Mount all eave starter trim (detail A - Page 4).
2. Always follow local building codes for proper installation and code compliance. EDCO recommends using high-temperature, non-granule coated synthetic underlayment for maximum performance and durability. The recommended assembly for this material is as follows:
   - Install 36" wide high temperature, non granule coated ice and water shield at all eaves and valleys (denoted by dark lines & tint). Extend 24" beyond the inside wall.
   - Use high temperature, non-granule coated ice and water shield cut to 18-inch wide for end walls, vented and non-vented hips / ridges, skylights, rake edge, and any vents through the roof (denoted by tinted area).
   - Cover the rest of the roof with ice and water shield, synthetic underlayment or #30 felt (denoted by white area).
3. Install optional rake starter with 7/8" J-trim (Page 5).
4. Install valley flashing (details C & D - Pages 6 & 7).
5. Install end wall flashing (detail E - Page 8).
6. Install roof panel going from left to right and bottom to top (detail F - Page 9).
7. Install valley cap (Closed valley assembly - Page 7).
8. Use 6-inch wide sub seal over unvented hips and unvented ridges. Mount vented and non-vented hip / ridge cap systems (details G & H - Pages 12 & 13).

General underlayment instructions

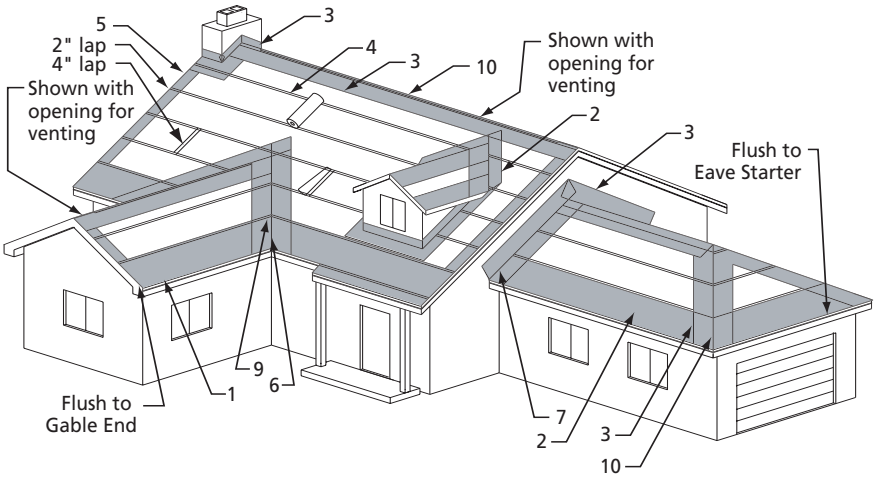

Tools needed

- Screw gun
- Hammer
- Chalk line
- Snips
- Caulk gun
- Roofing brackets or jacks
- Utility knife & blades
- Shingle remover
- Knee pads
- Portable brake
- Tape measure
- Hand seamer
- Hand stapler

Installing High temperature ice and water shield

Check to see that no nails or staples are protruding from the roof decking before applying high temperature, non granular coated ice and water shield. Do not nail any closer than 6" from the rake edge or the bottom of the roof when mounting panels. Steps 2 & 3 are shown as tinted and Step 4 is shown as white.

2a: At the eave starter, apply the first row of 36" underlayment to be flush to the bottom edge of the eave starter and flush at the gable ends. 24" inside external wall.

2b: Install 36" wide underlayment in valley (18" each side with 6" vertical overlap.)

3: Use underlayment cut to 18" wide and provide 6" of vertical overlap on hips, ridges, and rake edge.

4: Install 36" wide ice and water shield on the entire roof with a minimum of 2" horizontal lap and 4" vertical lap if needed.

Installing Synthetic underlayment or #30 felt paper

Check to see that no nails or staples are protruding from the roof decking before applying synthetic underlayment or #30 felt paper. Do not nail any closer than 6" from the rake edge or the bottom of the roof when mounting panels. Steps 2 & 3 are shown as tinted and Step 4 is shown as white.

2a: At the eave starter, overhang the first row of 36" wide underlayment to be flush to the bottom edge of the eave starter and flush at the gable ends.

2b: Install 36" wide underlayment in valley (18" each side with 6" vertical overlap).

3: Use underlayment cut to 18" wide and provide 6" of vertical overlap on hips and ridges.

4: Install synthetic underlayment or #30 felt on the entire roof with a minimum of 2" horizontal lap and 4" vertical lap.

REFER TO LOCAL BUILDING CODES

Eave Starter (Detail A)

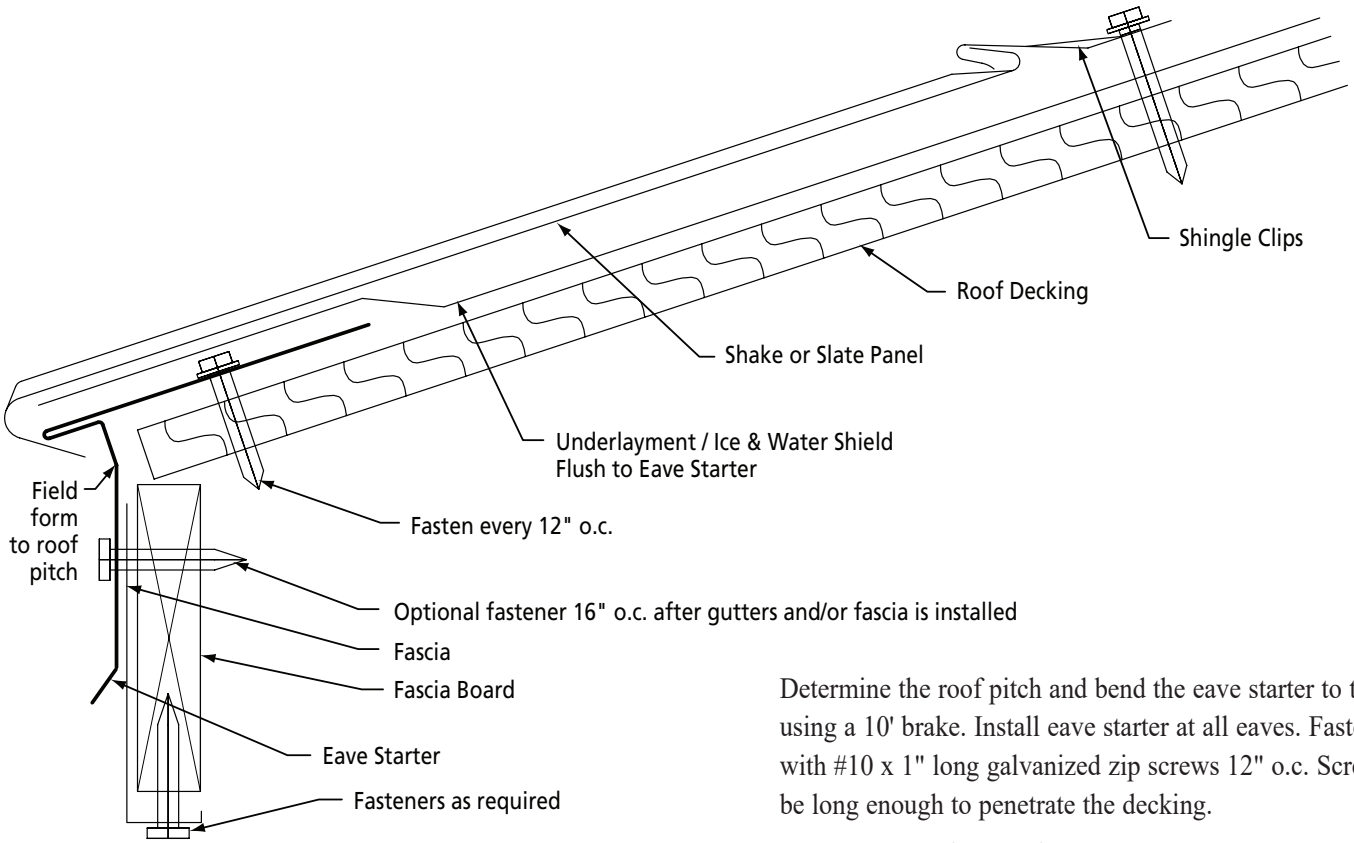

Determine the roof pitch and bend the eave starter to the correct angle using a 10' brake. Install eave starter at all eaves. Fasten eave starter with #10 x 1" long galvanized zip screws 12" o.c. Screw length is to be long enough to penetrate the decking.

Underlayment is to be installed over the eave starter.

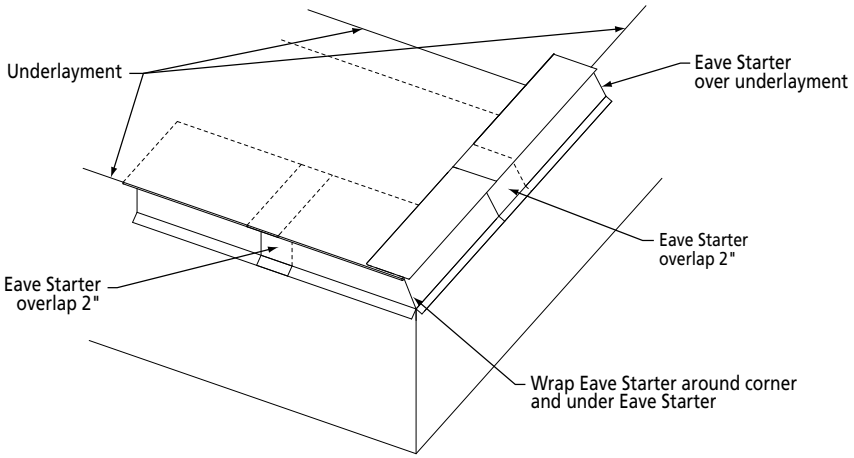

When installing roofing panels take care to avoid walking on the butt of the panels. It is recommended that you walk on the middle part of the panel. (See illustration to the right.)

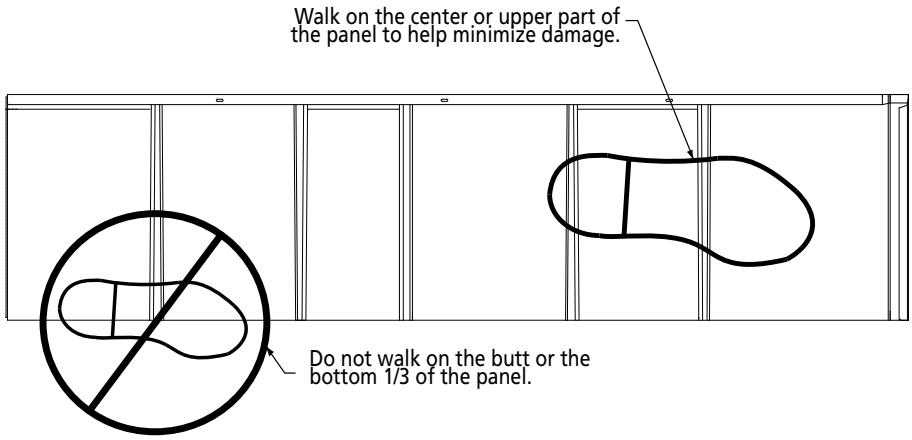

Gable Edge (Detail B)

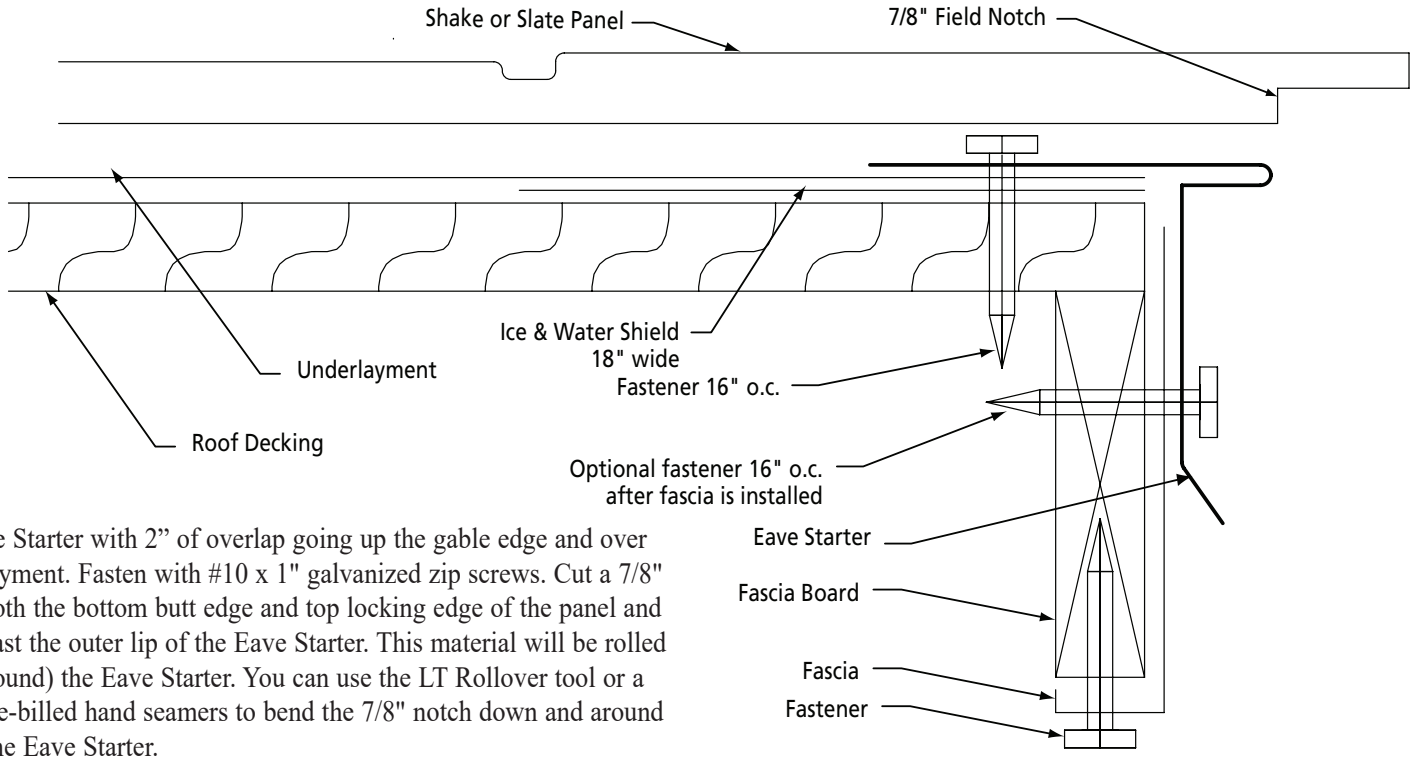

Install Eave Starter with 2” of overlap going up the gable edge and over the underlayment. Fasten with #10 x 1" galvanized zip screws. Cut a 7/8" notch on both the bottom butt edge and top locking edge of the panel and extend it past the outer lip of the Eave Starter. This material will be rolled over (or around) the Eave Starter. You can use the LT Rollover tool or a pair of wide-billed hand seamers to bend the 7/8" notch down and around the lip of the Eave Starter.

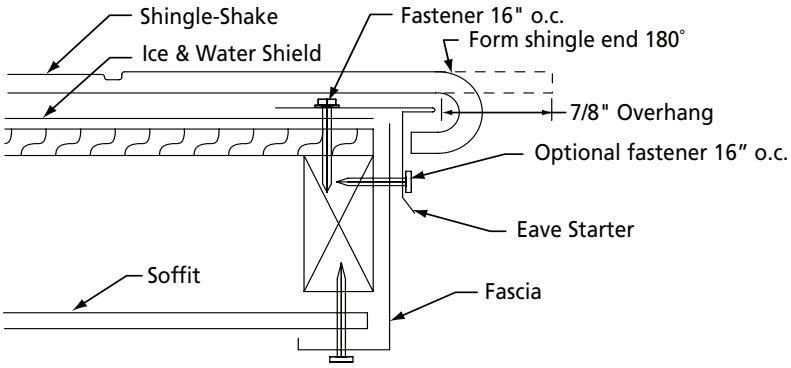

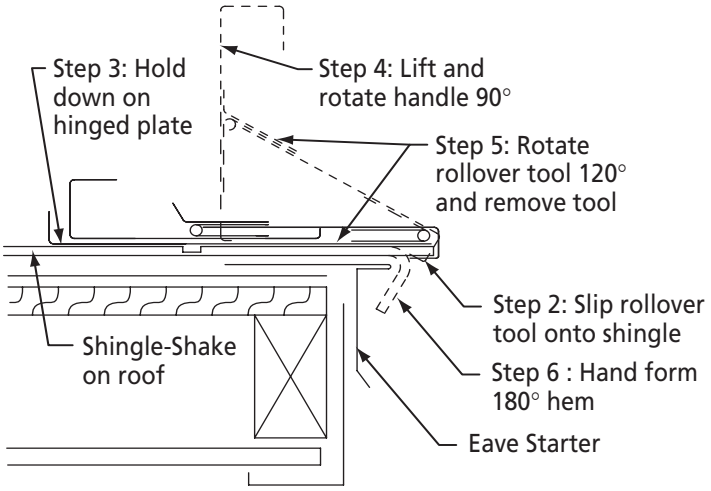

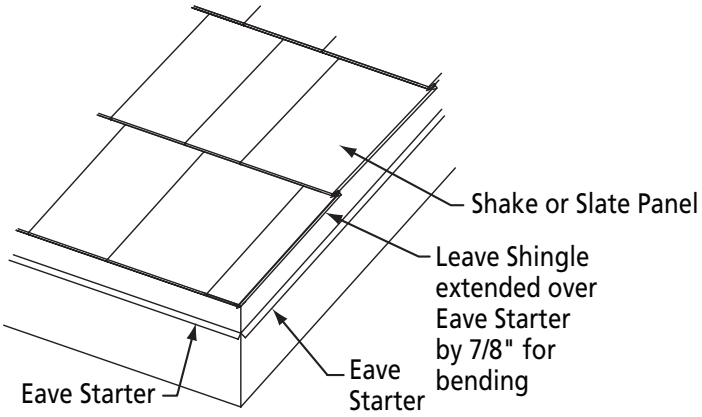

Have the panel overhang the eave starter by 7/8" and cut to length. Notch the top and bottom legs of the shingle back 7/8". Then form the shingle overhang around with LT Rollover Tool.

Optional Gable Detail w/ J Trim

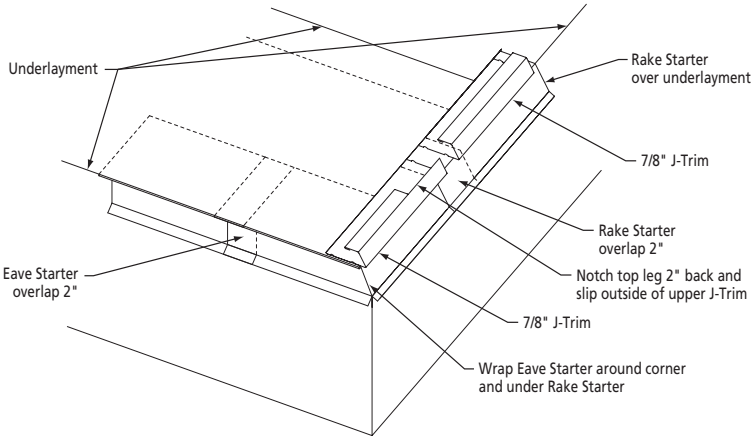

The optional Gable Detail with J Trim (shown above) is not recommended on roofs located in Snow Belt areas.

Open Valley Flashing (Detail C)

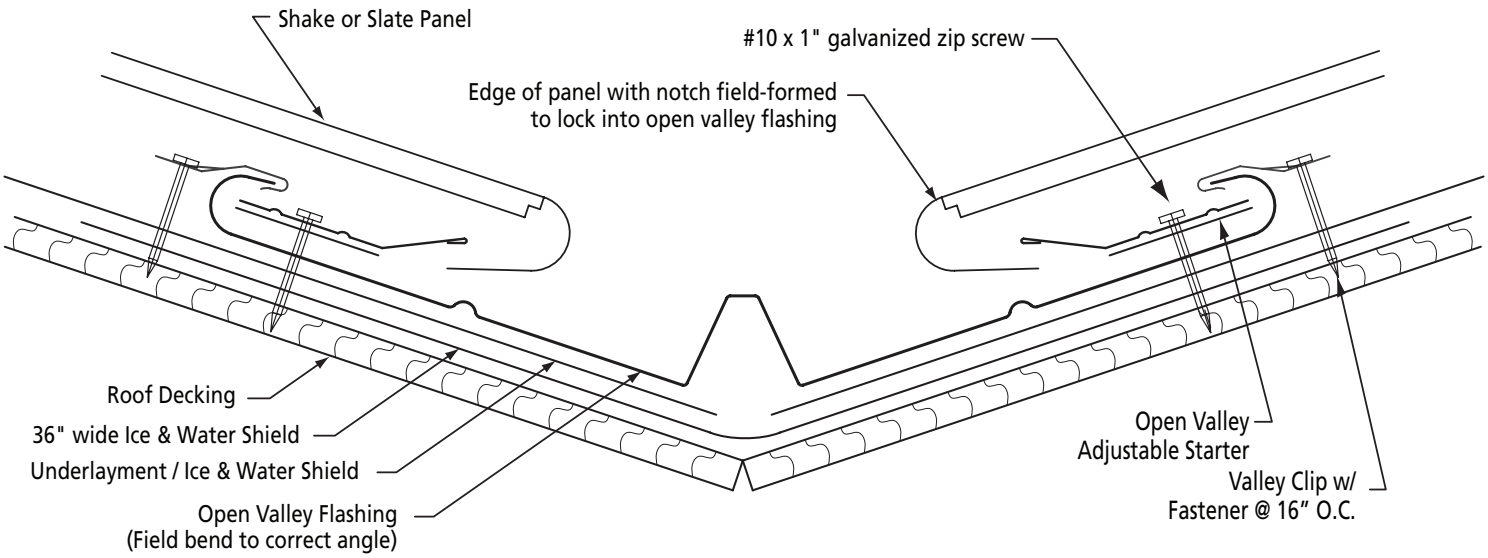

Regular Open Valley Installation

To assure a properly aligned and straight valley installation, it is important to first snap a chalk line in the center of the valley, running the full length of the valley. (Make sure underlayment has been applied in the valley per local building codes.) Then begin installing the valley flashing from the bottom. Trim the bottom of the valley to the correct angle and allow 5/8" to bend around the eave starter. Notch hem of top valley and overlap valley 4" and put 2 rows of sealant between overlap. Fasten valley in place with clips and fasteners on the outer edge of the valley every 16" on center.

Remember to snip through the bottom clip and valley flashing so the valley flashing won't slide out of place. Next install the Open Valley Adjustable Starter. The Open Valley Adjustable Starter can be placed either tight into the hemmed edge of the valley flashing or at another place that makes the open valley look portional. Fasten the Open Valley Adjustable Starter with #10 x 1" screws spaced every 16" on center. Always use sealant when overlapping accessories. (The roofing panels will need to be field hemmed to lock onto the Open Valley Adjustable Starter.)

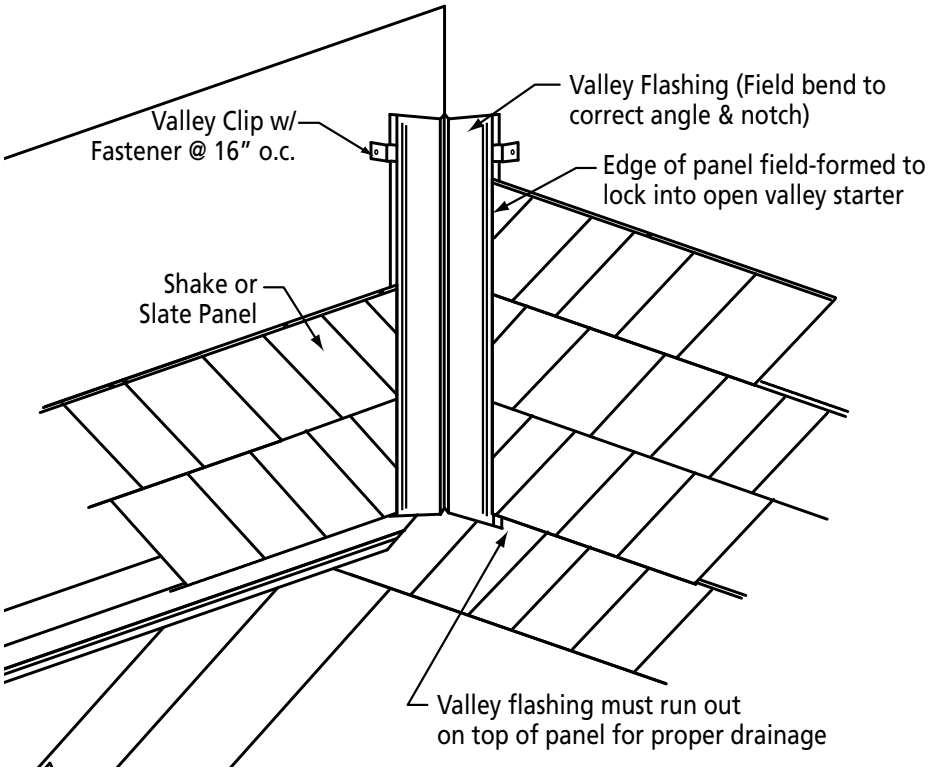

Floating Valley Installation

To assure a properly aligned and straight valley installation, it is important to first snap a chalk line in the center of the valley, running the full length of the valley. Install Ice & Water Shield in the valley if needed. Run shake or slate panels up past the lowest point of the floating valley. Lay the valley flashing in the valley and over the panels coming up from below. Mark the valley so that it is long enough to drain any water out on top of the panel below. Trim and field form the valley as needed. Notch and lap the top of the valley if needed. Remember to apply two rows of sealant between the two pieces of valley at the lap. Fasten properly depending on which valley flashing you are using.

Closed Valley Assembly (Detail D)

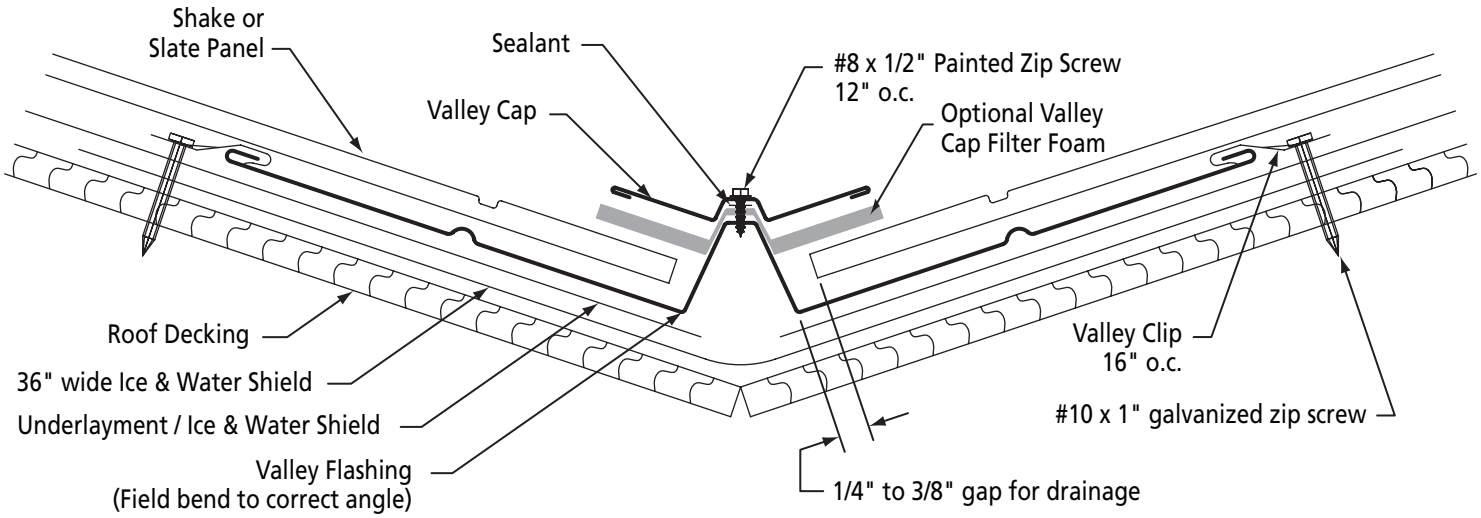

To assure a properly aligned and straight valley installation, it is important to first snap a chalk line on the roof in the center of the valley, running the full length of the valley. Then begin installing the valley flashing starting from the bottom. Trim the bottom of the valley to the correct angle and allow 3/4" to bend around eave starter. Notch hem of top valley and overlap valley 4" and put 2 rows of sealant between overlap. Fasten valley using valley clips at 16" o.c. Snip through clips on bottom of valley to hold it in place. Always use sealant when over-lapping accessories.

Use natural curing sealant on center of the flat top on the vee of the valley. Install the valley cap over the valley flashing flat top vee. The valley cap is installed with the lower always 2" over the upper valley cap. Fasten using #8 x 1/2" painted steel zip screws spaced 12" o.c.

Note: In roof areas where you would have large volumes of snow or water running into the valley it may be advisable to use the Open Valley System. Also, in areas where leaves, needles and other debris might be a problem use the Valley Cap Filter Foam under the Valley Cap.

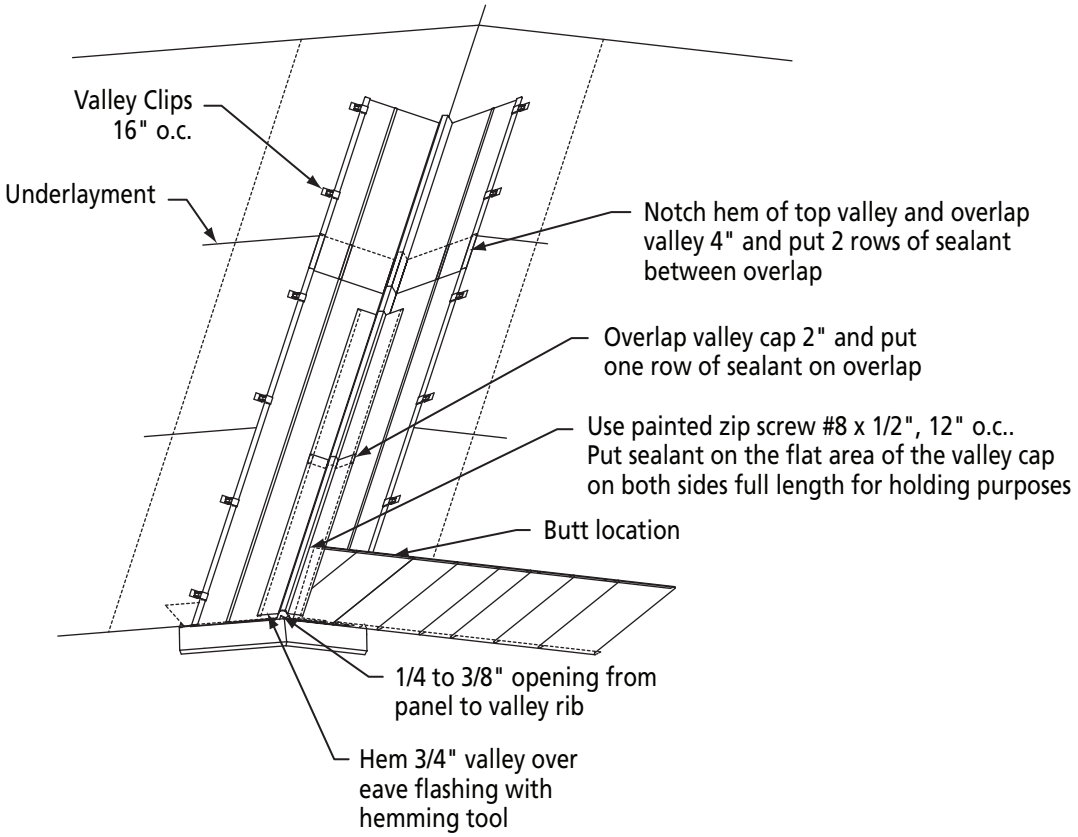

Side Wall Flashing (Detail E)

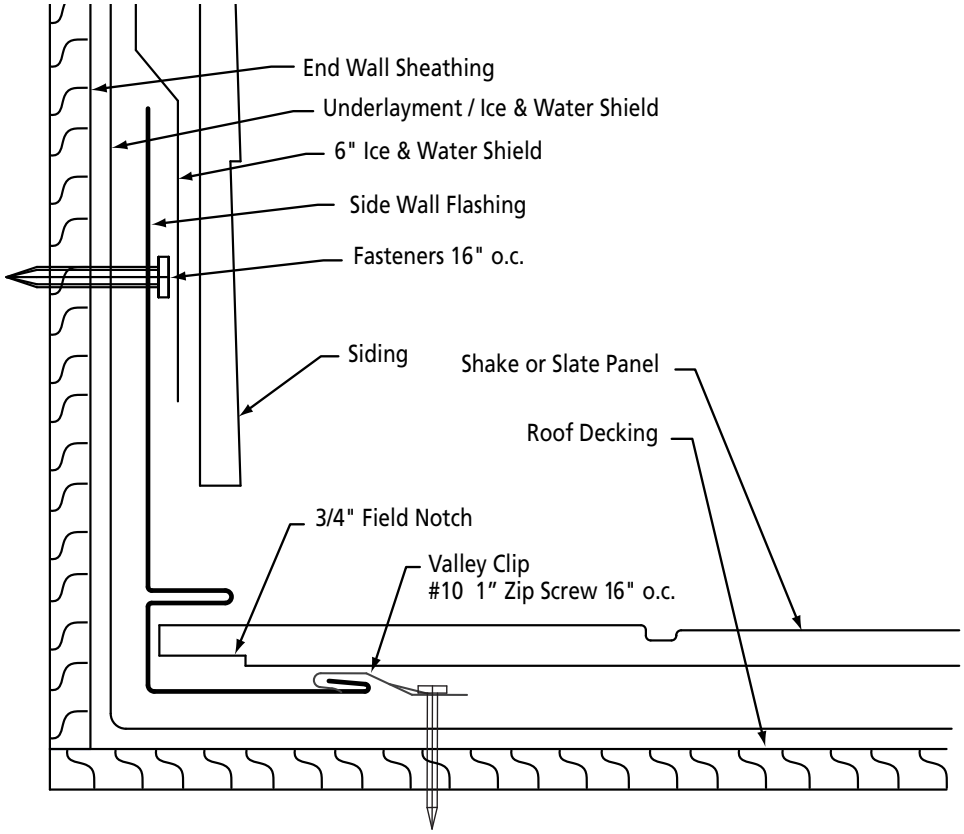

The side wall flashing is designed to be used at the sides of end walls, dormers, chimneys, skylights, etc. Install ice & water shield cut to 18" wide as counter flashing. Use matching embossed trim coil when custom top and bottom flashings are required. Always use proper sealants for water tightness.

Begin installing side wall flashing (always overlap trims by 4" using sealant) with galvanized fasteners. In side wall applications, it is preferable to have the top leg of the side wall flashing go underneath the siding as far as possible. Use 6" ice & water shield seal strip over the end wall flashing. When stucco or brick is present on side wall you must cut a kerf approximately 1/2" into the stucco or brick at least 4" above the roof deck. Cut and bend side wall flashing to fit into kerf and allow for an edge to apply sealant.

When installing panels, cut a 3/4" wide weep hole in the bottom butt edge of the panel inside the J-trim. This allows the side wall flashing to drain any moisture on top of the roofing panels.

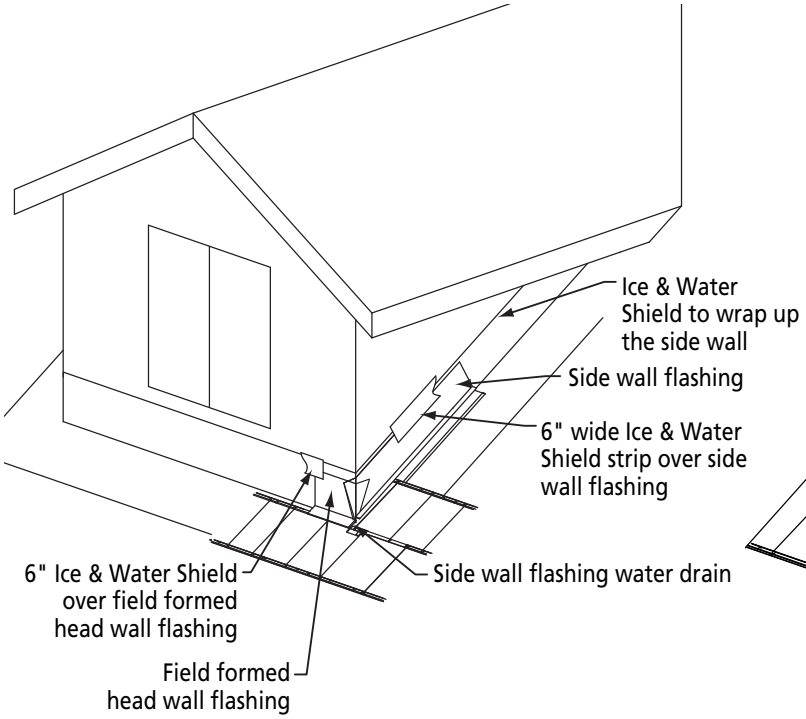

Allow for proper drainage if chimney is in the middle of the roof. Check local building codes.

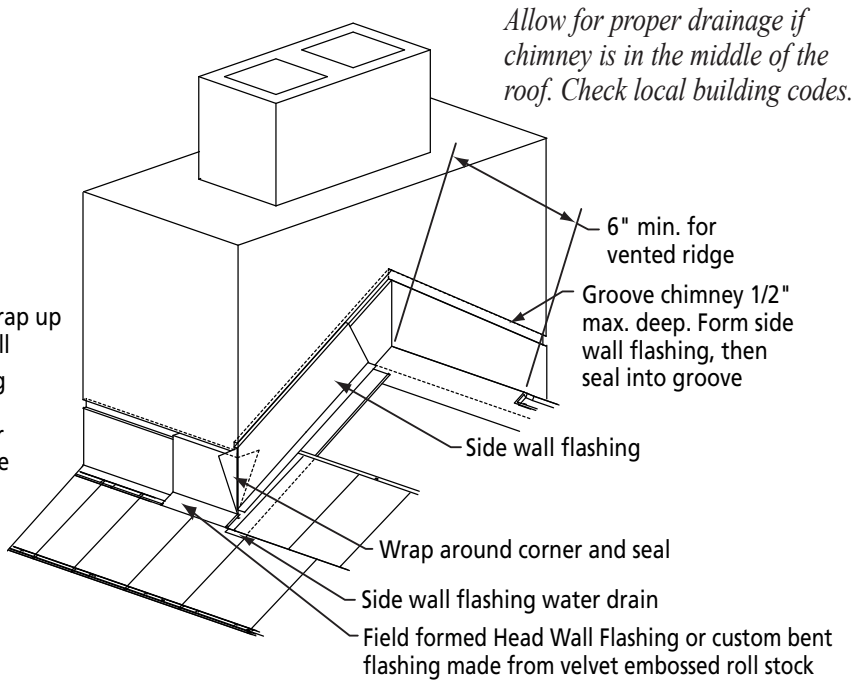

Head Wall Flashing

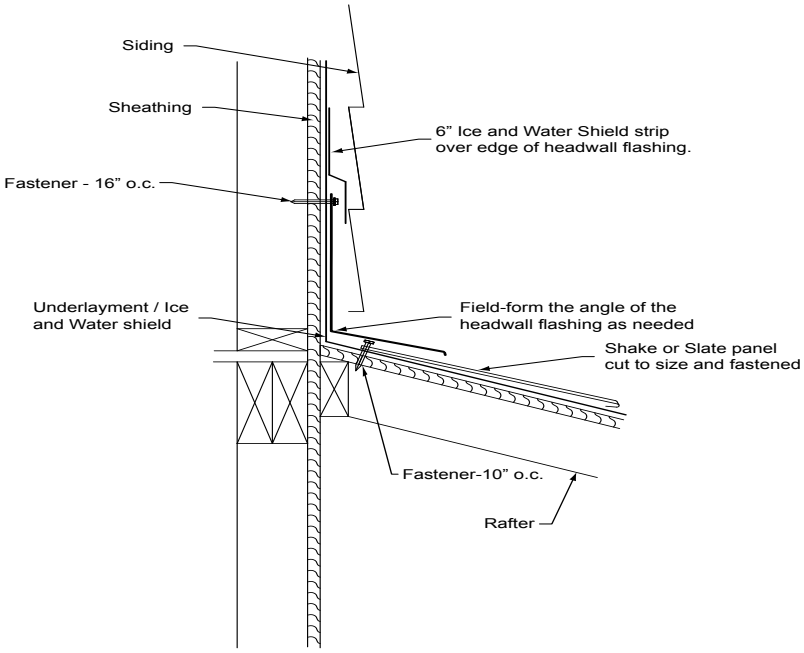

Head Wall Flashing is designed to be used at the front of dormers, chimneys, roof transitions, etc. Install 18" wide ice & water shield as counter flashing up the wall 9" and the rest on the deck. Next, bring the panels up to the intersection and cut to width. Head Wall Flashing is installed now and may need to be formed to match the slope of the roof. Fasten in place and cover the top edge of the Head Wall Flashing with a 6" wide piece of Ice & Water Shield. Use matching embossed trim coil when custom flashings are required. Always use proper sealants for water tightness.

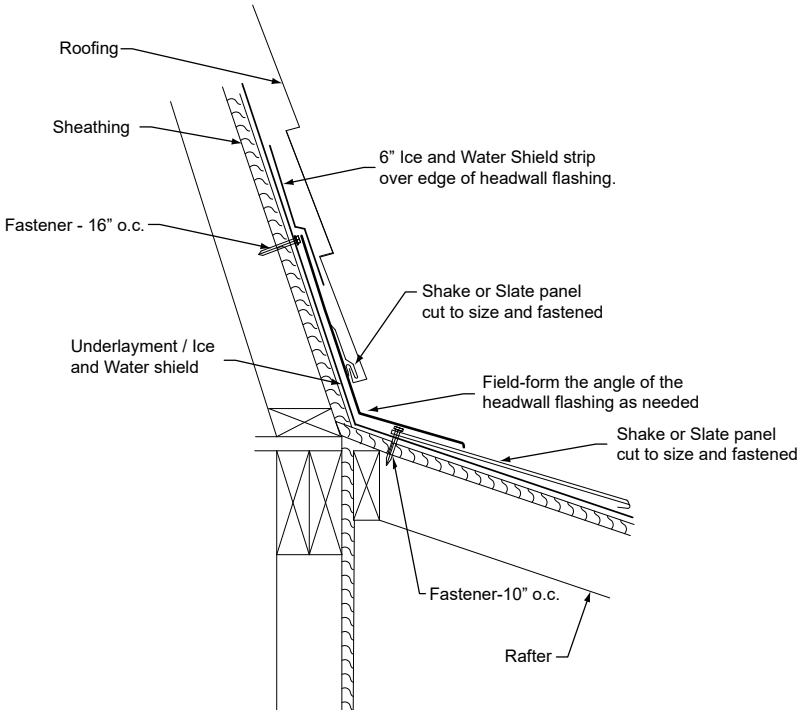

Shake/Slate Panel (Detail F)

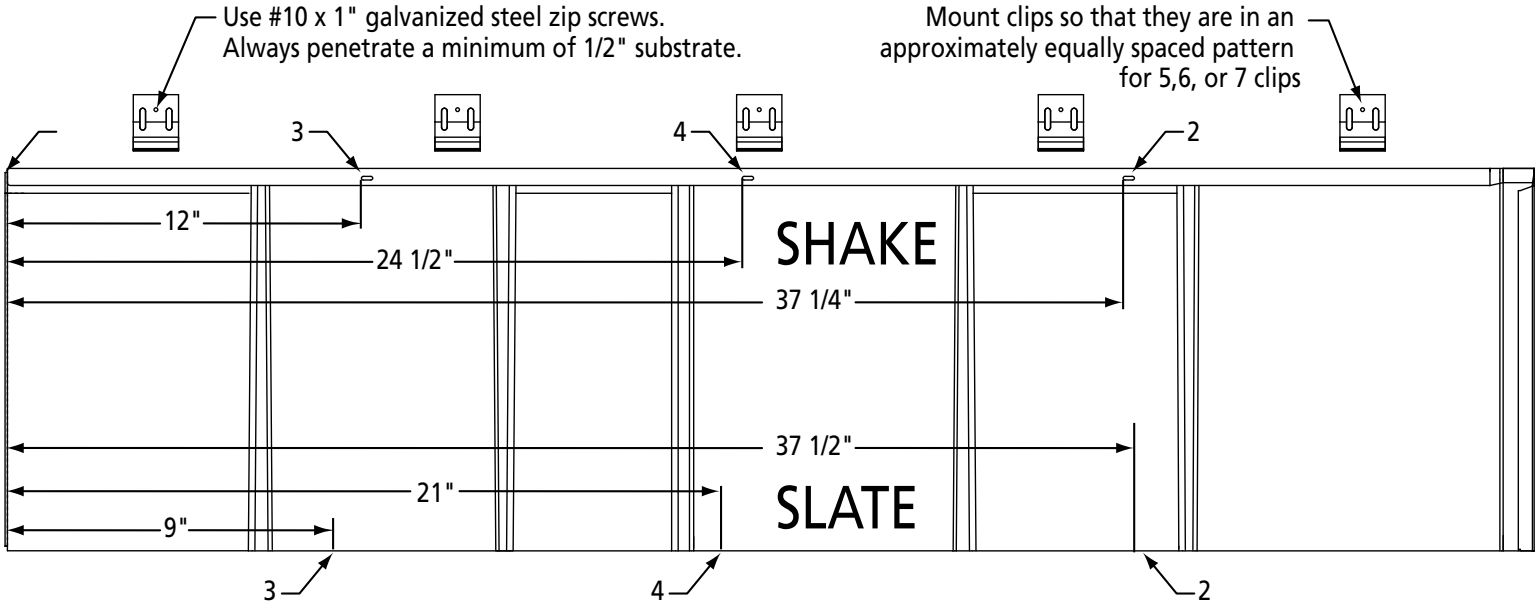

After the completion of all prep work and the accessories have been applied, you can begin installing panels. Always install from left to right and attach with 5, 6, or 7 approximately equally spaced clips per panel. The first and last clip on each course should be snipped at the hooking area through the top flange of clip. This procedure will help pin the course in place and minimize any horizontal shifting (see detail #1 below).

Start the installation at the bottom left hand corner of the roof with a full panel. After installing a number of panels you can start the second course. There are dimples stamped into the top hook of each panel. As noted above they have been designated "1", "2", "3" and "4". Do not start the second course with a full panel. In an effort to create a random staggered joint appearance it is recommended to cut the first shingle-shake of the second course at dimple "2". You may then continue installing on this course using only full panels. You can then begin the third course by cutting the first panel at dimple "3" and installing it. The fourth course should begin with a panel cut at dimple "4". The fifth course should be started with a full panel and you should repeat the above staggering procedure on all subsequent courses.

When installing at hips or valleys be sure to follow the above cutting procedure to insure the same random staggered pattern.

(When installing the panels be careful of where you walk on the panels. See page 4 for more information.)

SNOW DIVERTERS:

The use of snow diverters is recommended in areas where ice and snow can build up on your roof.

The snow diverters should be installed and spaced according to the manufacturer's recommendations.

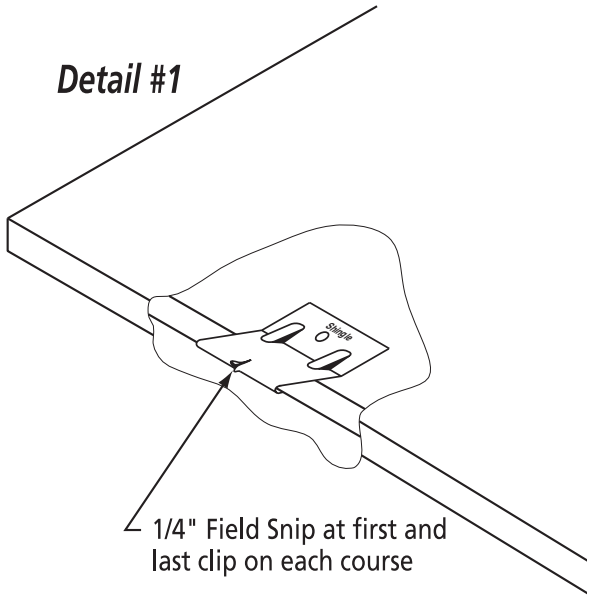

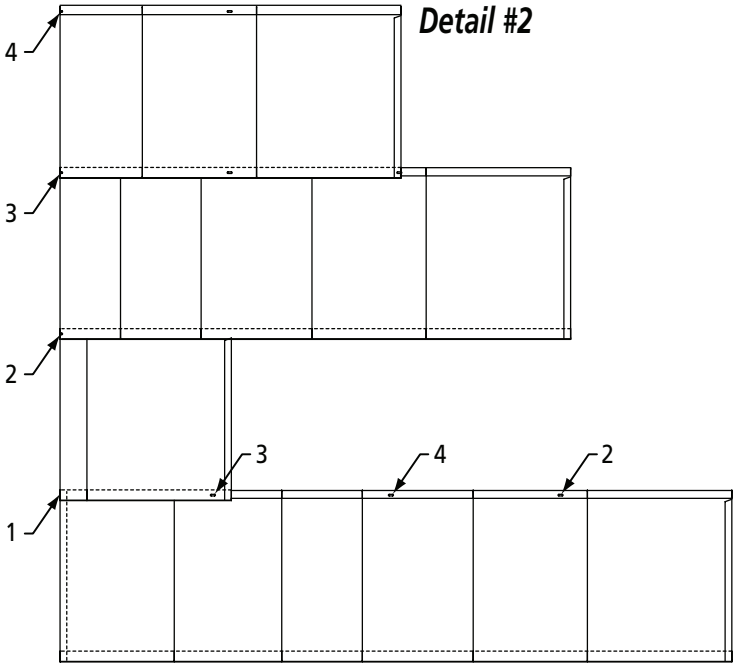

Installing Sno Gem

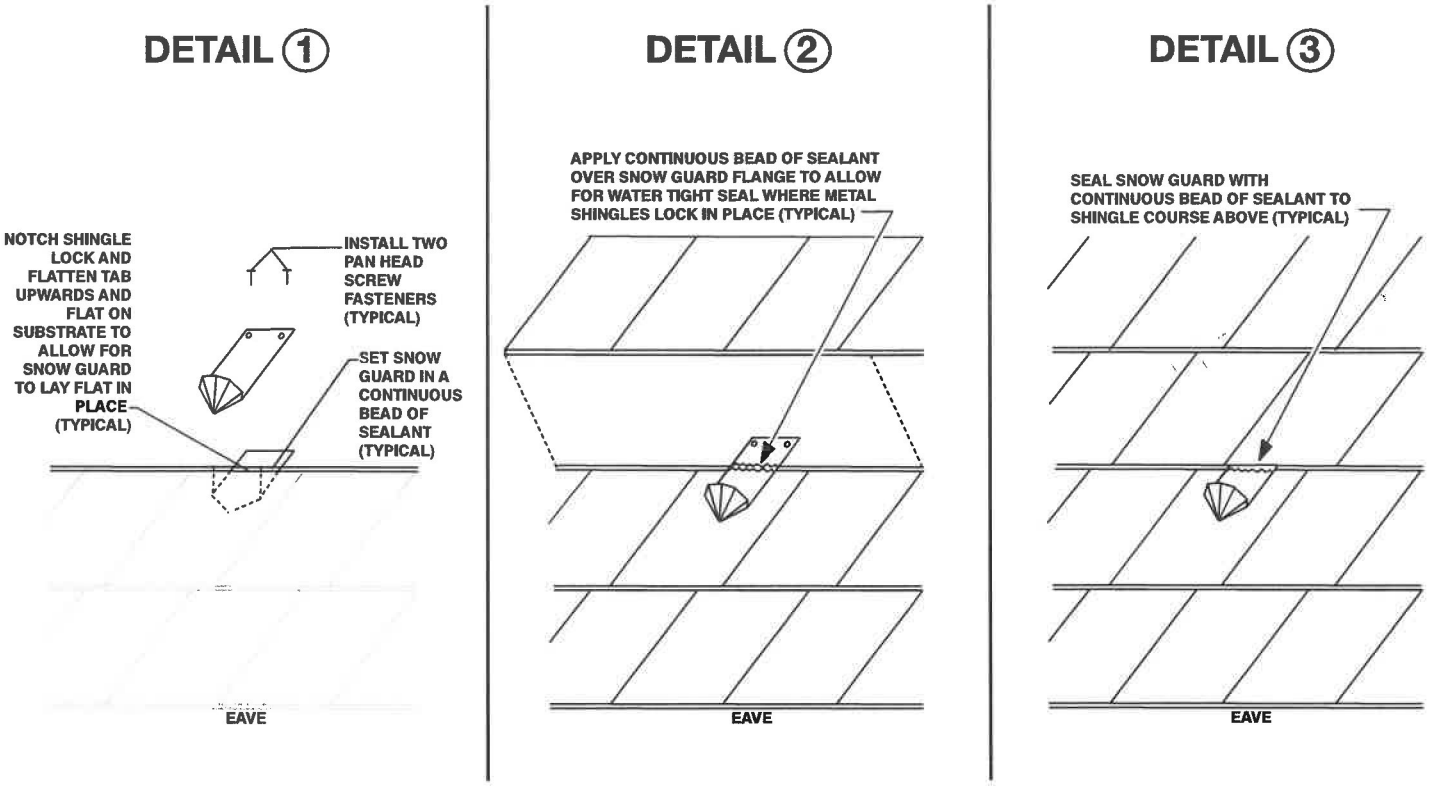

We recommend installing snow retention devices like Sno Gems on all roofs in the snow-belt during the installation of the roofing panels. When properly installed, they will help minimize or prevent large amounts of ice and/or snow from sliding off your roof all at once.

Sno Gems can also be installed in a retro-fit manner. Special instructions are available detailing how to do this procedure.

If you are not sure how many to install or where they should go, please contact EDCO and we will help you figure out the number required for the roof and provide a drawing showing where they should be placed and the proper spacing.

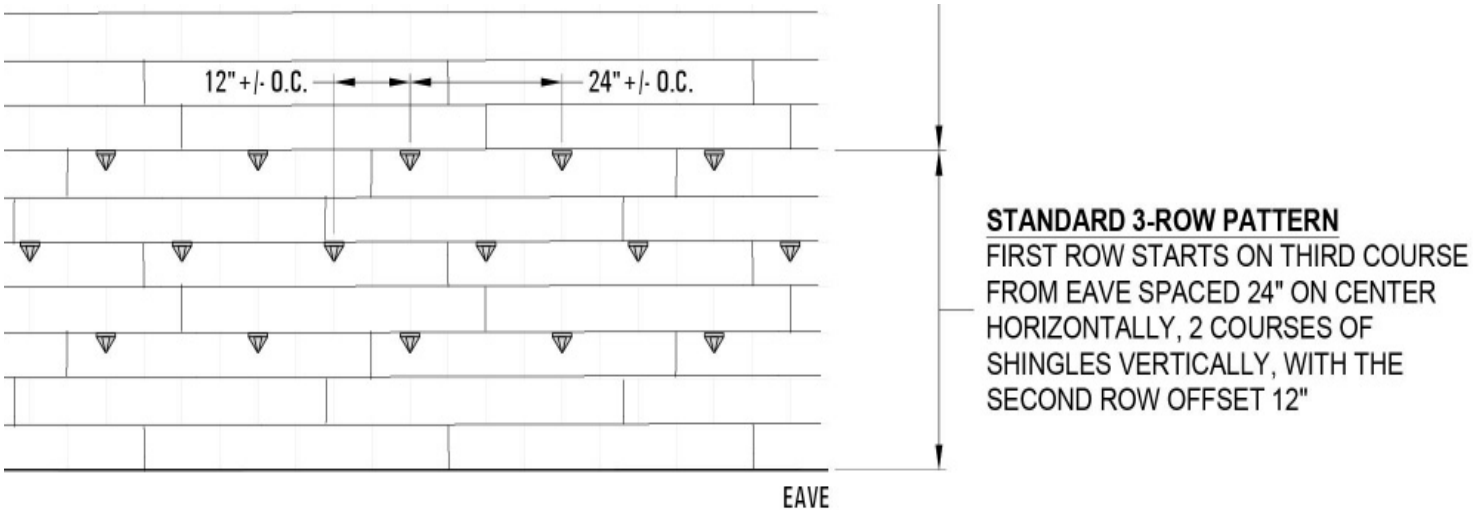

Hip / Ridge Assembly (Detail G)

(non-vented)

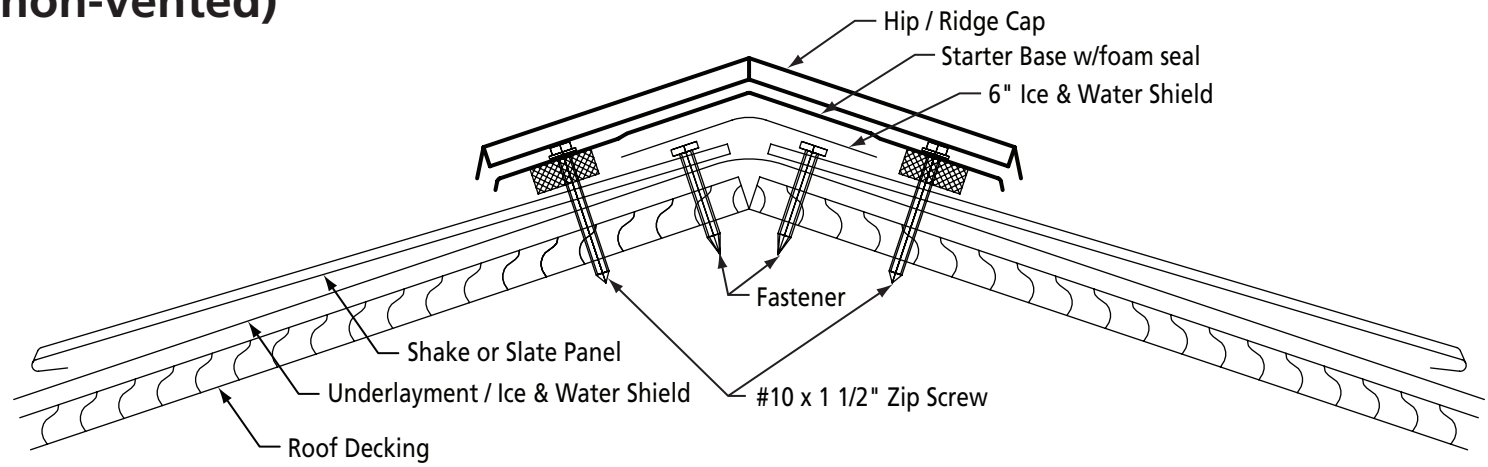

Cut panels to the proper length and install as close to the hip or ridgeline as possible. Cover cut edges with 6” of ice & water shield centered along the entire length of the hip or ridge edge. Bend Starter Base w/foam seal in a 10’ brake to the correct roof pitch. Install starter base over the panels and overlap subsequent pieces approximately 4” using sealant. The hip / ridge caps should be installed over starter base with #10 x 1 1/2” steel zip screws using 2 shingle clips per hip / ridge cap.

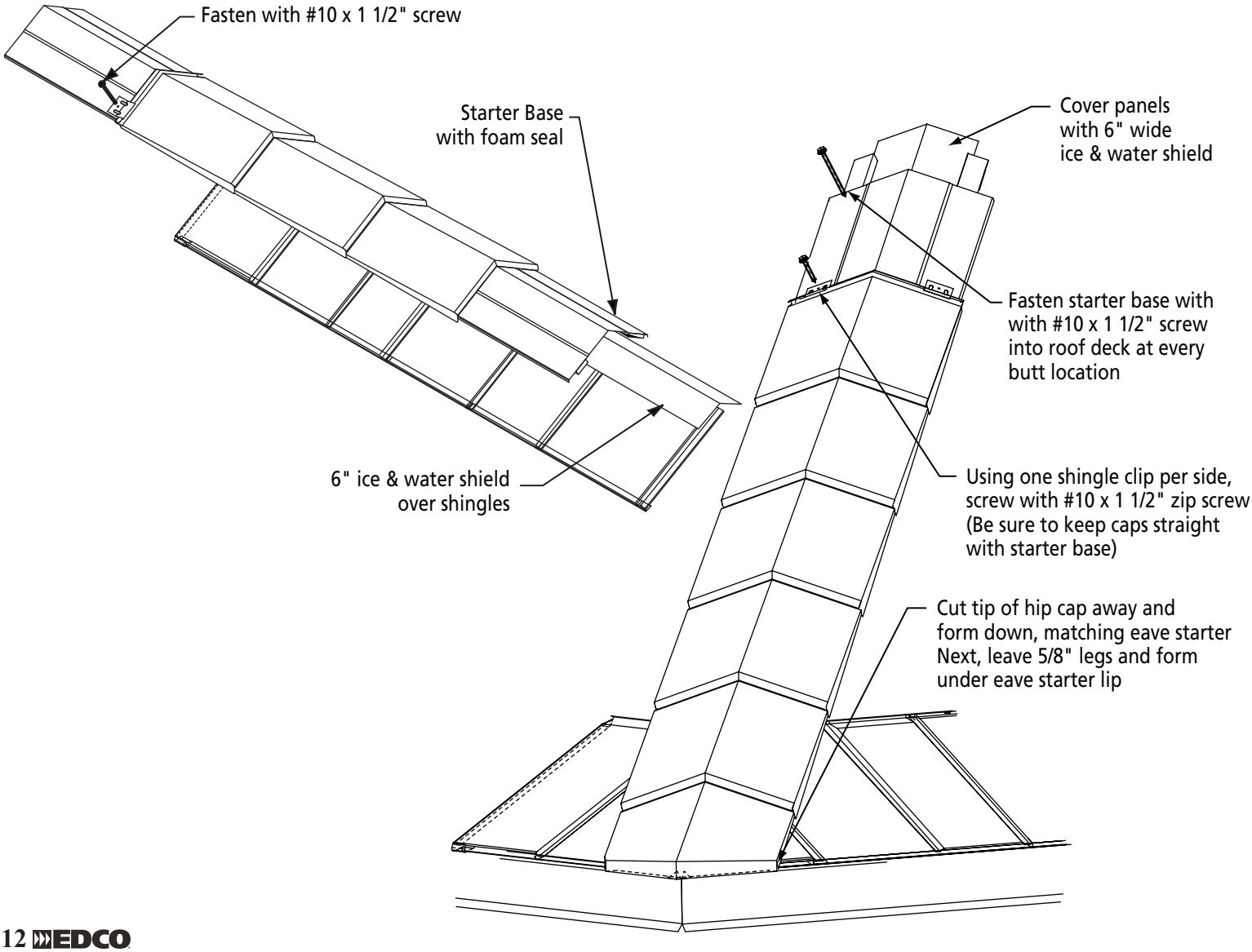

Hip / Ridge Assembly (Detail H) (vented)

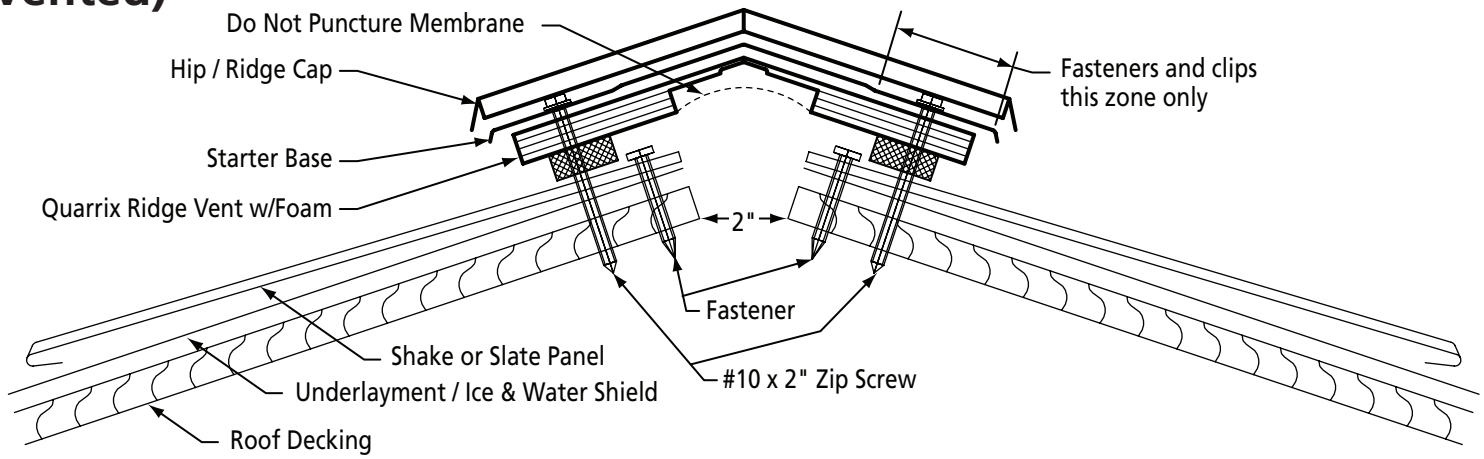

(1) When using the Quarrix Ridge vent system, first cut appropriately sized, 2" wide venting opening through the roof decking to no closer than 6" of the end walls. (See Ridge and Soffit Ventilation Requirements on p.12). When venting hips for more air flow, go down from the peak no more than 1/3 the maximum distance from the top. Going down the ridge too far affects air flow to the peak.

(2) Lay Quarrix Ridge vent with foam the full length of ridge, matching the pitch angle of the roof and keep straight. Tack and use sealant when necessary.

(3) Bend starter base to correct roof pitch over lapping 4" on splices. Use #10 x 2" steel zip screw spaced 12" apart to keep the vent system as flat as possible.

(4) Install hip / ridge caps over the starter base with #10 x 2" steel zip screws using 2 shingle clips per hip / ridge cap.

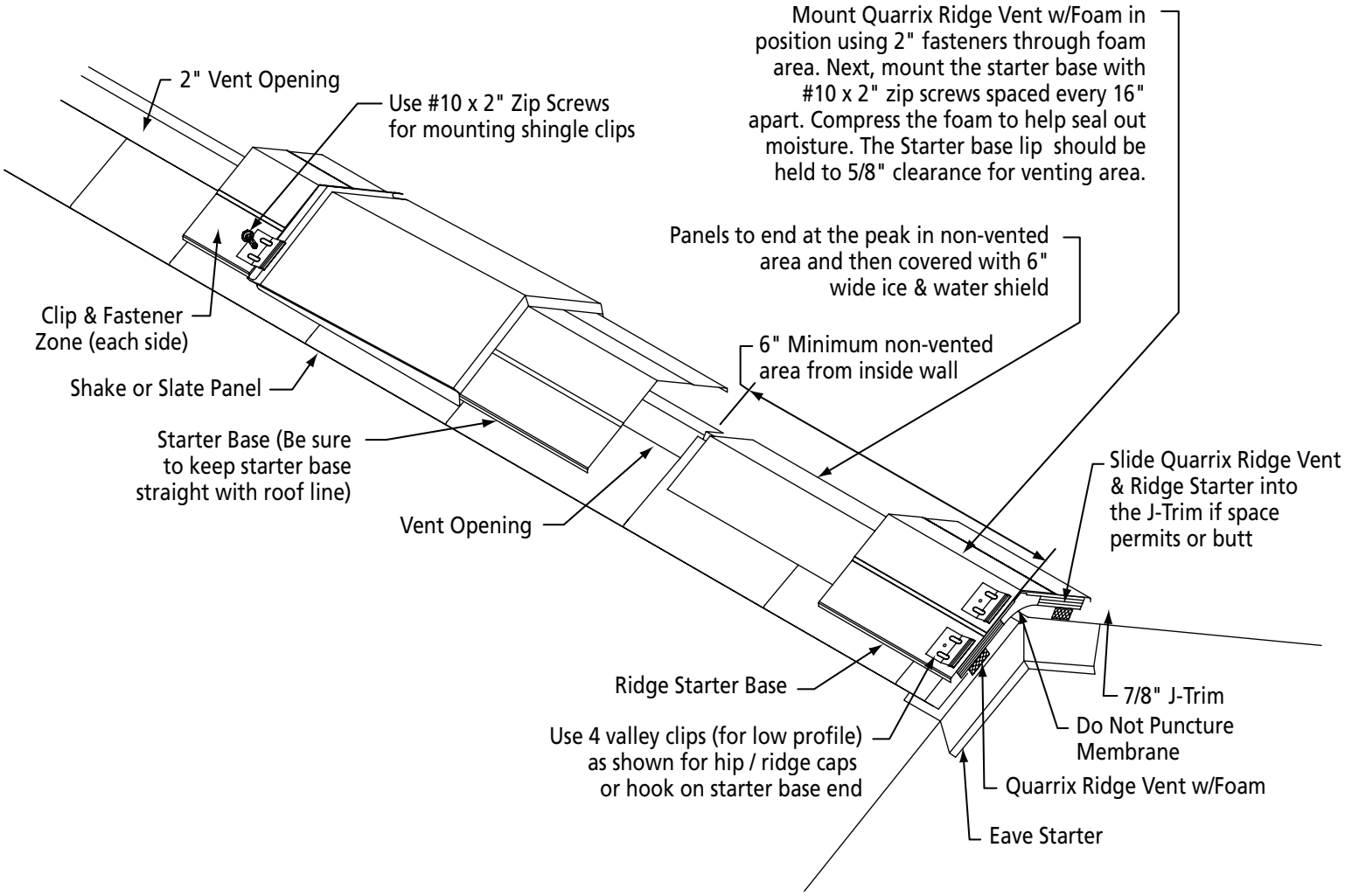

Ridge & Soffit Ventilation Requirements

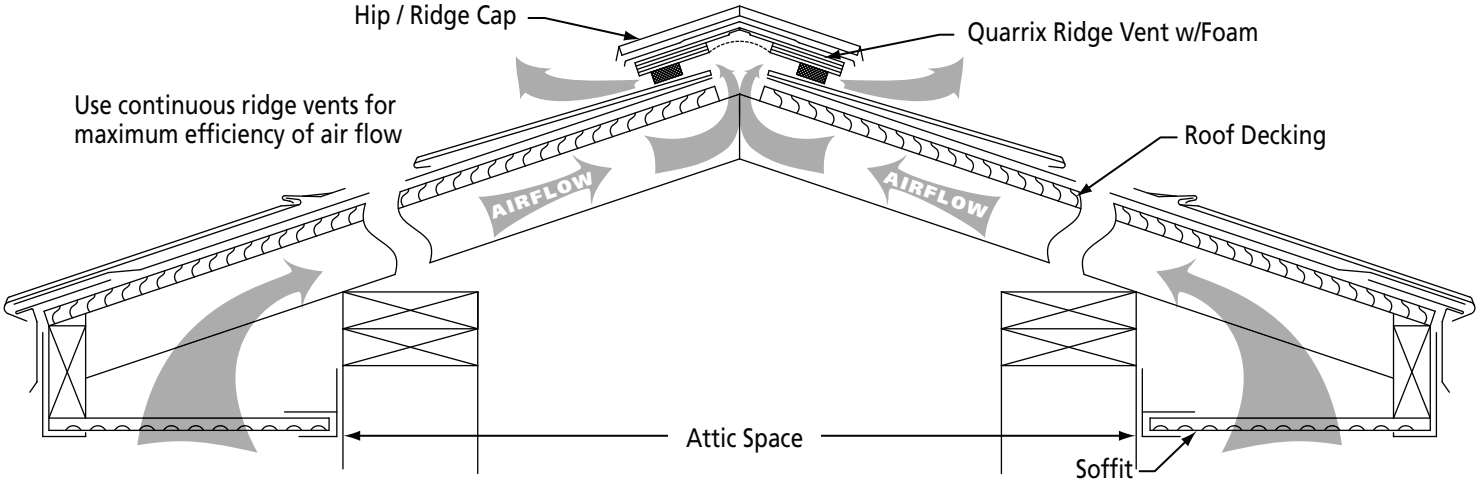

Calculations are based on equal ventilation at the ridge and at the eaves. This requires a 1:300 ratio (1 square foot of ventilation to every 300 square feet of attic space). (Check the local building codebook for exact requirements.) This calculation is for 50% at the ridge and 50% at the soffit. Note: The soffit and ridge vent are to be at least equal to each other. The eaves are recommended to have an adder of 10% to 25%, this increases airflow pressure to the peak.

Contact an architect or your local building official if you need additional information.

Calculations: using 5/8” thick Quarrix Ridge Vent with 13 square inches / lineal foot of free air per foot.

1. Calculate attic floor space
   30 feet wide x 40 feet long = 1200 square feet
2. Using 1:300 ratio net free airflow. (Total ridge and eave air flow)
   1200 square feet / 300 square feet = 4 square feet
3. Calculation for the ridge or soffits (50% min. for each)
   4 square feet / 2 = 2 square feet min.
4. Convert 1 square foot to square inches for one side
   144 square inches x 2 square feet (Total for ridge or soffit) = 288 square inches per side
5. Quarrix Ridge Vent Plus 5/8” thick (13 sq. inches net free air per foot) used for ridge and hip venting
   288 square inches / 13 = 22.15 feet of ridge vent

Attic Sq. Ft.	Sq. Inches at Ridge	Min. Ft. of Vent	Sq. Inches Soffit Vent
1000	240	18	240
1100	264	20	264
1200	288	22	288
1300	312	24	312
1400	336	26	336
1500	360	28	360
1600	384	30	384
1700	408	31	408
1800	432	33	432
1900	456	35	456
2000	480	37	480

Attic Sq. Ft.	Sq. Inches at Ridge	Min. Ft. of Vent	Sq. Inches Soffit Vent
2100	504	39	504
2200	528	41	528
2300	552	42	552
2400	576	44	576
2500	600	46	600
2600	624	48	624
2700	648	50	648
2800	672	52	672
2900	696	54	696
3000	720	56	720

Roof Vent Flashing

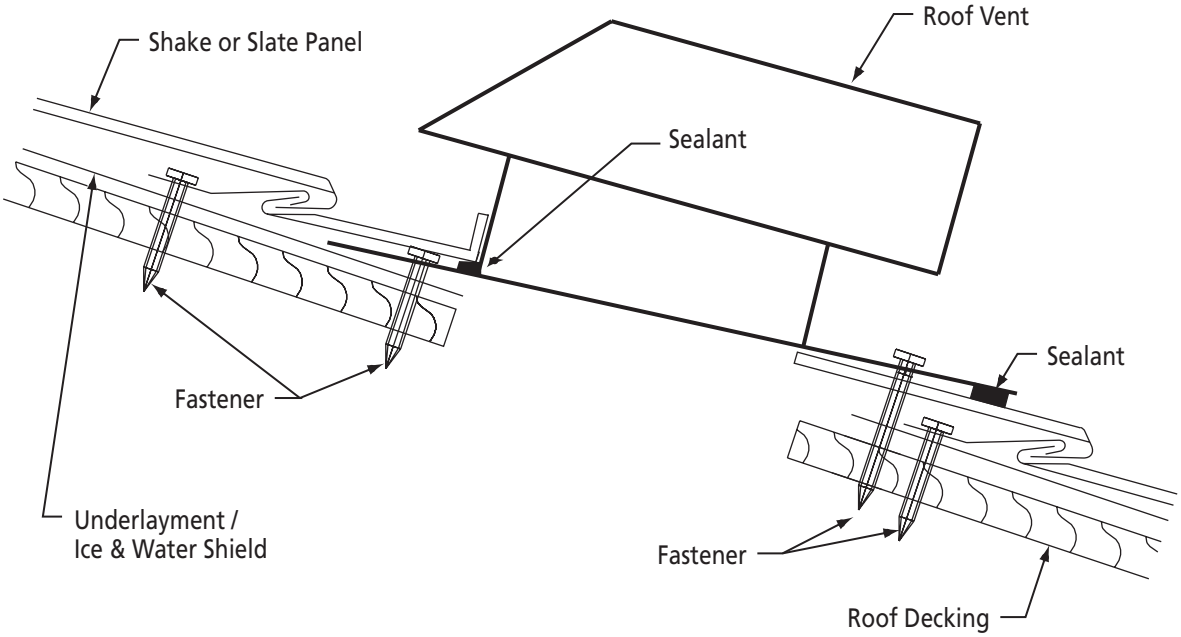

We recommend replacing all roof vents with the Quarrix venting system (see page 11). Do not mix Quarrix vents with other roof or gable vents. When using Quarrix vents remember to close off all other roof vents.

If individual roof vents are used to ventilate attic space, care should be taken in selecting an adequate number of properly sized roof vents. The vents should have metal flashing attached and all manufacturer's installation recommendations should be followed. The metal flashings on the vents should be reworked (as shown above) to assure a watertight installation. Use painted zip screws to install, along with sealant under flashing and on all sides of vent.

Pipe Vent Flashing

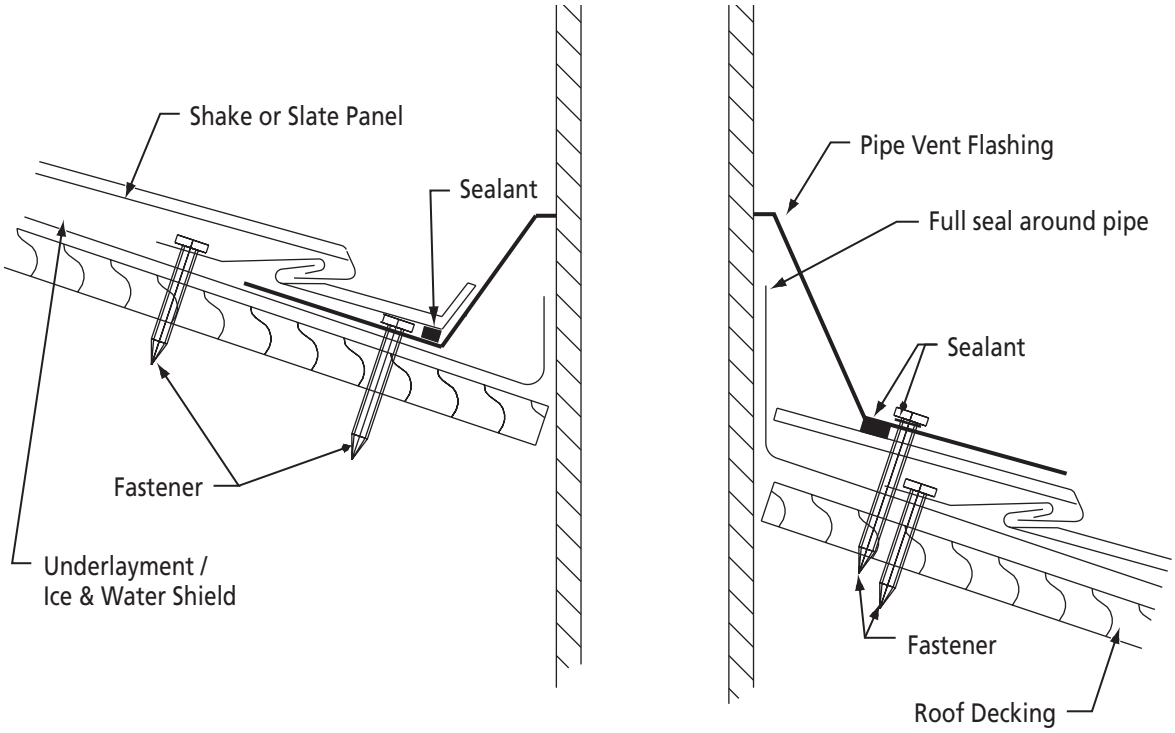

Select properly sized vent pipe (a tight fit is important) with metal or rubber boot flashing. Follow manufacturer's installation guidelines and use adequate sealant to assure water tightness. Use painted zip screws to install, along with sealant under flashing and on all sides of vent.

Side Wall Installation (Detail J)

When mounting in a gable application - use 1-2-3-4 pattern

7/8" J-Trim

Starter Strip Steel #1063-000

For mounting patterns of panels and clips - see Detail F

7/8" J-Trim

Fasteners every 16" o.c.

Starter Strip - Steel #1063-000

(end profile)

5/8" Snap-On Corner Substrate

Shake or Slate Panel

3 1/4" Snap-On Outside Corner Post Cap

Siding

Starter strip #1063-000 fasteners 16" o.c.

Installing EDCO roofing on a sidewall

1. Check the wall for any low spots, rotted boards and other irregularities that may affect the installation. If any of these areas are found they should be repaired. This is a good time to install a housewrap.

2. Corner bases can be installed after the wall is properly prepared. They should be fastened 12” on center with galvanized nails or staples through the nailing slots. Make sure the bases are square on the corner.

3. The starter strip is fastened 16” on center through the nailing slots. Leave room for expansion and contraction between the corners, J-Channel and starter strip pieces.

4. Installation of J-Channel around doors and windows is next. Start installation on the bottom of the windows. The bottom J-channel will be cut 1 ¼” longer than the window sill. Notch the channel 5/8” on each end so that the flap can be folded up against the sides of the windows. Nail the pieces 16” on center. J-channel for the sides of the windows and doors are also cut 1 ¼” longer. Then notch the channels to allow for proper flow if water gets into the channel. Finish the tops of the doors and windows with a J-channel or drip cap. Make sure all intersections are properly flashed and/or caulked.

5. The structure is now ready for the installation of EDCO roofing/sidewall panels. Start in the lower left corner of the wall as these panels have a 4-way interlocking system. Hook the bottom leg of the panel on the bottom edge of the starter strip. Fasten the panels in place using galvanized fasteners and clips. Install the second panel by hooking the left edge into the right edge of the first panel.

6. Start the second course of roofing panels with a piece that has been cut at the dimple/number on the top edge of the right side of the panel. Fasten the panel in place. A full panel is installed next. The third course is started with a panel that was cut at the dimple/number on the left side of the panel and the fourth course is started with a panel that is cut at the center dimple/number. The fifth row will start with a full panel and then you repeat the stagger pattern listed above for subsequent rows.

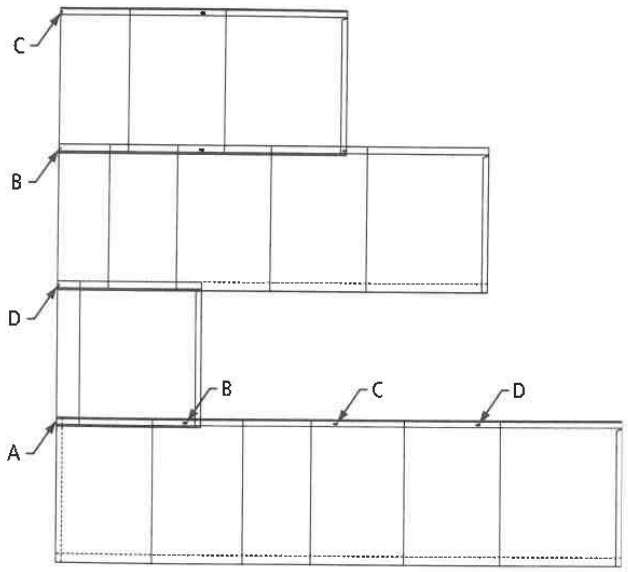

Roof Jack

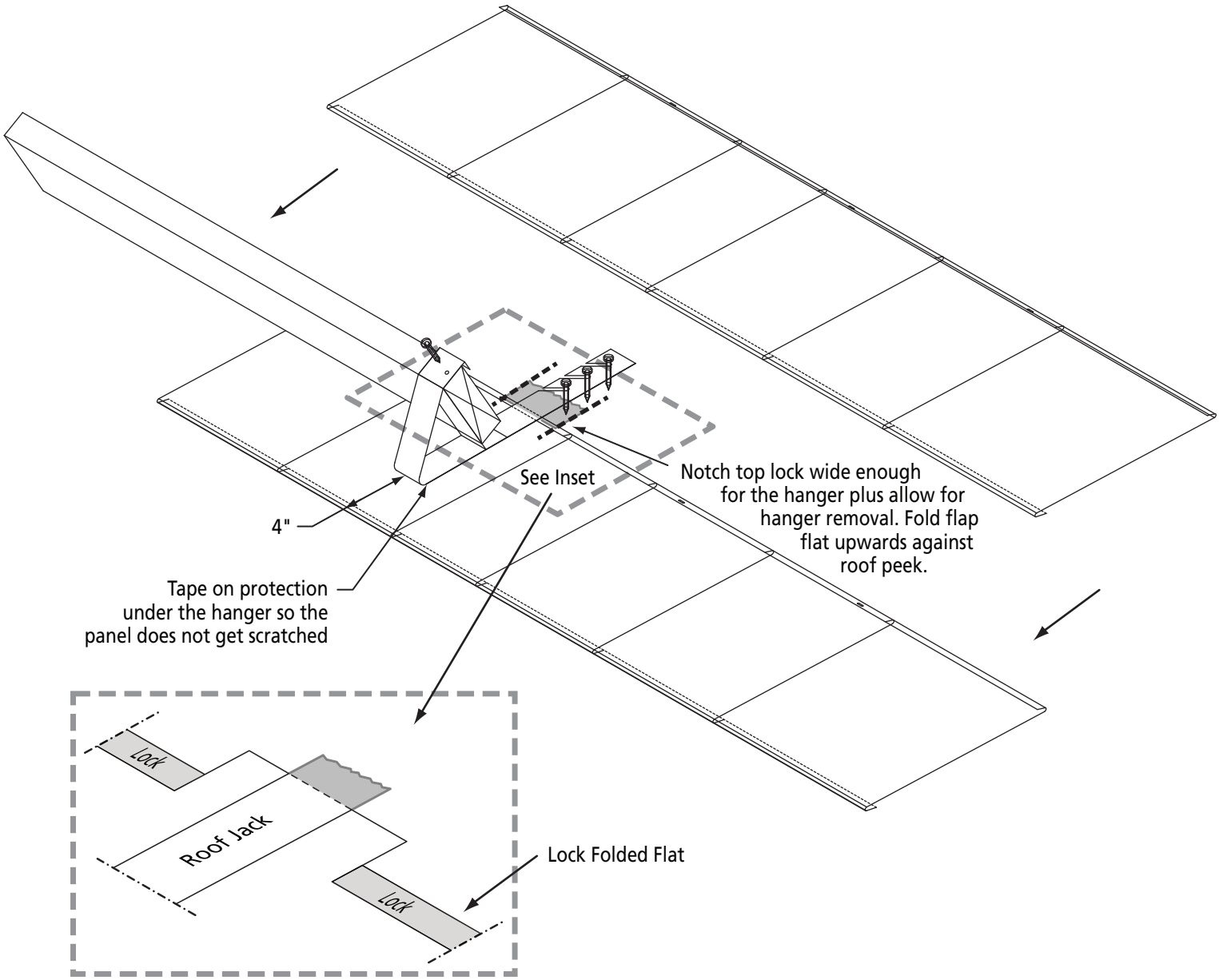

IMPORTANT

See hanger instructions from the manufacturer for proper use and mounting instructions required.

These instructions show modification of the roofing panel.

1. Mount hanger over top of panel per diagram.
2. Mount top panel with clips.
3. Remove hanger when done installing panels.
4. Apply bead of sealant where hanger was removed.

Roofing Estimating Guide _____

Ridge Assembly: _____**Total Linear Feet**

Ridge Starter Base: 10′ Lengths_____No. of pieces

Quarrix Venting: 10′ LengthsNo. of pieces

Hip Assembly: _____**Total Linear Feet**

Starter Base with Foam: 10′ Lengths_____ No. of pieces

Field Area:

Total Sq. Ft + 15% (+/-) for waste _____ Total sq. feet

1/2 Square Cartons _____ Cartons

See back of sheet for guidelines on figuring amount of roofing

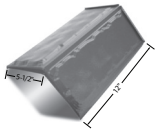

Hip & Ridge Caps: _____**Total Linear Feet**

Add Hip & Ridge: 1′ Pieces _____No. of pieces

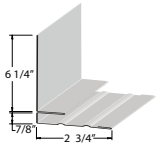

Endwall Flashings _____ **Total Linear Feet**

Vertical Wall Int. 10′ Length _____No. of pieces

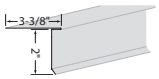

Eave Starter: _____ **Total Linear Feet**

10′ Lengths _____ No. of pieces

Shingle Clips

Figure 120/sq. and 2 per Hip/Ridge Cap (100/bag)

No. of clips for roofing _____

No. of clips for hip caps _____

Total of clips needed _____

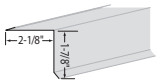

Rake Starter: _____ **Total Linear Feet**

10′ Lengths _____ No. of pieces

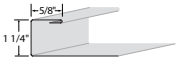

7/8″ J-Channel: _____ **Total Linear Feet**

10′ Lengths _____ No. of pieces

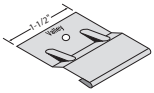

Valley Clips

Figure 20 per Valley Flashing _____ No. of pieces

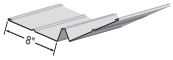

Valley Flashing _____ **Total Linear Feet**

10′ Lengths _____ No. of pieces

Screws:

#10 x 1″ Hex Head (500 / Jar) _____ No. of pieces

#10 x 1-1/2″ Hex Head (500/Jar) _____No. of pieces

#10 x 2″ Hex Head (250 / Jar) _____ No. of pieces

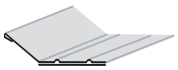

Open Valley Starter:

10′ Lengths - 2pcs/Valley _____ No. of pieces

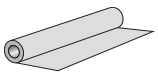

Underlayments:

PSU Ice/Water 36″ x 72″ _____ No. of rolls

UDL 30-year 48″ x 250′ _____ No. of rolls

UDL 50-Year 48″ x 250′ _____ No. of rolls

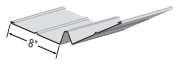

Closed Valley Assembly _____ **Total Linear Feet**

10′ Lengths _____ No. of pieces

Valley Cap 10′ _____ No. of pieces

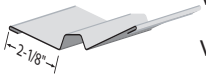

Valley cap filter foam 6′6″ pieces _____No. of pieces

Multiplier 1____ Multiplier 2____ Multiplier 3____ Multiplier 4____ Multiplier 5____ Multiplier 6____ Multiplier 7____

EDCO Products Inc. 8700 Excelsior Boulevard, Hopkins, MN 55343 800-593-2680 edcoproducts.com

EDCO 19

PÁGINA 2

La preparación y las condiciones generales

1. Los cartones se deben almacenar en un sitio seco a cubierto. Lleve sólo un cartón a la vez y evite las piezas sueltas en en tejado.
2. Siga toda compensación de trabajadores y pautas de seguridad de OSHA.
3. Se requiere el pitch del tejado mínimo de 4/12.
4. Inspeccione todo roof sheathing and framing para asegurarse que es libre de alabear, en buen estado y abrochado apropriadamente.
5. Cuando esté retechando, determine si el tejado que existe tiene que ser quitado. Antes de instalar los nuevos shingle shakes sobre las tejas existentes, quítese cualquiere amoldamiento en la tabla de fascia, luego, vuleva a cortar las tejas a nivel con la tabla fascia en el eave and rake lines.
6. Una clase "una" de calificación del fuego puede ser lograda por cubrir el área entera del tejado con Georgia-Pacific 1/4" Dens-Deck . El Dens-Deck se debe aplicar directamente por el sheathing o el tejado existente y debajo del reforzamiento nuevo. Shingle shakes que se instala directamente por el felt underlayment del mínimo de #30 sin 1/4" Dens-Deck logrará una calificación de la clase C.
7. El tejado entero se debe cubrir con un reforzamiento antes de instalar shingle-shakes. El reforzamiento se debe escoger basado en las condiciones climáticas y debe conformarse con todos códigos locales de edificios. Un reforzamiento de #30 felt se puede utilizar con capas dobles en los eaves edge a un punto por lo menos 24" dentro de la línea exterior de la pared, 18" en cada lado de la línea central por la longitud entera del valle y alrededor de aperturas. Los reforzamientos se deberán ser superpuestos 2" horizontalmente y 4" verticalmente.
8. En los climas que tienen temperaturas de menos de 32 grados y vientos altos serían convenientes utilizar un polímero hielo modificado de betún y protector de agua en vez de la capa inferior de reforzamiento duplicado y posiblemente a través del trabajo entero. El protector del hielo y el agua se recomienda para la construcción nueva que sigue como las recomendaciones del fabricante. Siga códigos locales del edificio.
9. La ventilación apropiada del ático es necesaria. Usar venting hip, ridge and soffit panels son una manera excelente de ventilar el ático. Vea la página 3 para detalles a preparar y la página 10 para instalar the hip and ridge vents.
10. Al caminar sobre el tejado, siempre lleve calzado con suela de goma y quedarse cerca de la cima del shingle-shake, bajo el saliente trasero donde el shingle-shake es más cercano a bajo al apoyo. Siempre evite a caminar en four way interlocks of shingle-shakes. Los métodos recomendados del andamio siempre se deben obedecer.
11. Los arquitectos, los contratistas, y los instaladores de tejados deben asegurarse que esos reglamentos de la construcción códigos de tejados se conformen con y aprueben. Antes de empezar la construcción, puede que se necesiten permisos del departamento local de edificio. Para calificar para la protección bajo la garantía del fabricante, se deben seguir las instrucciones de la aplicación en esto.
12. Para un informe detallado de sistemas del tejado, Uplift Resistance, vea EDCO Products Inc.

    Fila #R20815. UL 2218 Hail Resisitance rating of 4 (la clasificación más alta)

PÁGINA 3

El procedimiento de la sucesión de la instalación de tejas

Para la construcción nueva, se recomienda para utilizar el protector de hielo y agua en vez de #30 felt paper. El protector de hielo y agua sella alrededor de tornillos y clavos y es una barrera final de agua donde hay condiciones de lluvia fuerte y diques de hielo. Refiérase a instrucciones de fabricante y códigos locales de edificio.

1. Monte todo eave starter trim. (detalle A)
2. Instale el protector ancho de 36" de hielo y agua en todos eaves y valles (denotado por líneas oscuras y tinte). 24" más allá de la pared interior.
3. Use el protector ancho de 18" de hielo y agua para paredes finales, vented and non-vented hips/ridges, skylights, rake edge, y cualquiera abertura por el tejado. (denotado por el área tintada)
4. Cubra el resto del tejado con el protector de agua y hielo o #30 felt (denotado por el área blanco) Siga los códigos locales de edificio.
5. Instale rake starter with 7/8" j-trim. (detalle B)
6. Instale valley flashing (detalle C)
7. Instale side wall flashing (detalle E)
8. Instale las tejas completamente, de la izquierda a la derecha y del fondo al cumbre. (detalle F)
9. Instale valley cap (detalle C)
10. Use 6" sub seal por unvented hips and unvented ridges. Monte vented and non-vented hip/ridge cap systems. (detalles G y H)

Los instrumentos necesarios

Martillo	la línea de tiza	recortes
fusil de calafatea	Roofing brackets or jacks	
cutter y cuchillas	removedor de tejas	rodilleras
Korker foam soles	freno portátil	metro de cinta
hand seamer	grapadora de mano	

Para instalar el protector de hielo y agua

Compruebe que ningún clavo ni las grapas salen del tejado antes de aplicar el protector de agua y hielo. No clave más cerca que 6" del rake edge o el fondo del tejado cuando está montando las tejas. Las partes 2 y 3 son mostradas en color y la parte 4 es mostrada en blanco.

2a: En los eaves starters, sobresalga por encima la primera fila de 36" reforzamiento para ser flush a los gable ends. 24" al interior de la pared externa.

2b: Instale 36" ancho el reforzamiento el el valle (18" en cada lado con 6" sobresale vertical)

3: Use el reforzamiento de 18" y proporcione 6" de vertical overlap on hips, ridges, and rake edges.

4. Instale el protector de hielo y agua de 36" en el tejado entero con un mínimo de 2" de horizontal lap y 4" de vertical lap si sea necesaria.

Para instalar #30 felt paper

Compruebe que ningún clavo ni las grapas salen del tejado antes de aplicar #30 felt paper. No clave más cerca que 6" del rake edge o el

fondo del tejado cuando monta las tejas. Las partes 2 y 3 son mostradas en color y la parte 4 es mostrada en blanco.

2a: en el eaves starter, sobresalga por encima la primera fila de 36” reforzamiento para ser flush a la orilla inferior del eave starter y flush con los gable ends.

2b: Instale 36” reforzamiento el el valle (18” cada lado con 6” de superposición vertical)

3: Use 18” reforzamiento y proporcione 6” de superposición vertical en caderas y ridges.

4: Instale 36” #30 felt en el tejado entero con un mínimo de 2” de horizontal lap y 4” de vertical lap.

PÁGINA 4

Eave Starter (detalle A)

Fasten-Fíjese

Wrap-Envuélve

Notch-haga una muesca

Determine el grado del tejado y doble el eave starter al ángulo correcto usando un 10’ freno.

Instale eave starter y todos eaves. Fíjese eave starter con #10 x 1 tornillos galvanizados zip 12” o.c. La longitud de los tornillos tiene que ser tan larga como para penetrar el decking.

El reforzamiento se instalaría por el eave starter

PÁGINA 5

Rake Starter (detalle B)

Instale Rake Starter con 2” de superposición que sube el rake edge y sobre el reforzamiento.

Fíjese con tornillos galvanizados zip o clavos ring shank. Monte 7/8 ‘’ j-trim que sube el tejado y haga una muesca 2” en el j-trim lower y pone el upper j-trim adentro cuando sube el rake edge.

Haga una muesca bottom butt edge of shingle shakes 3/4” que extiende al j-trim a hacer un agujero en cada course de shingle-shakes. Esto permitirá que la humedad salga de la parte que sobresale.

Que sobresalga la teja del eave starter por una pulgada y corte. Haga una muesca el top leg de la teja de atrás una pulgada. Forme la superposición de la teja con el LT Shingle former.

PÁGINA 6

El ensamblaje del valle (detalle C)

Para asegurar una instalación apropiadamente alineada y recta del valle, es importante marcar primero una línea de tiza en el tejado en el centro del valle que abargue toda la longitud del valle.

Entonces empiece a instalar el valle flashing, desde abajo. Corte el fondo del valle a un ángulo correcto y deje 5/8” para doblar alrededor del eave starter. Haga una muesca hem del top valley y superponga 4” y ponga 2 filas de silicona entre superposición. Fíjese el valle usando los clips del valle en 16” o.c. Siempre utilice sellador cuando superponga los accesorios. Utilice natural curing silicone en el centro de la cima del V en el valle. Instale el valley cap sobre el valley flashing flat top V. Se instala el valley cap con el lower, siempre 2” sobre el upper valley cap. Fíjese usando #8 x 1/2” tornillos pintados aceros zip, espaciado 12” o.c.

PÁGINA 8

El ensamblaje final de la pared (Detalle E)

El ensamblaje final de la pared está diseñado para ser utilizado en los lados de paredes finales, dormers (buhardillas), las chimineas, skylights (claraboyas), etc. Instale reforzamiento de 18” de hielo y agua como counter flashing. Use matching embossed trim coil when custom top and bottom flashings are required. Siempre utilice selladores apropriados para aislar del agua.

Empiece a instalar el conjunto de tres trozos de la pared (siempre superponga trims por 4” usando los selladores) con clavos galvanizados de ring shank. En aplicaciones de las paredes finales, es preferible tener las piernas primeras en el end wall flashing se baja de la teja tan lejos que es posible. Use 6” protector de hielo y agua strip sobre el end wall flashing. Cuando hay yeso o ladrillo en la pared final, tiene que cortar un kerf aproximadamente 1/2” en el yeso o ladrillo o a lo menos, 4” sobre la cubierta del tejado. Corte y doble end wall flashing para acomodar en el kerf y dejar un borde para aplicar un sellador.

Cuando esté instalando entrepaños, haga un agujero en el fondo del borde trasero dentro del j-trim. Permita el end wall starter desague toda la humedad encima de los shingle shakes.

PÁGINA 9

Shake/Slate (detalle F)

Los entrepaños vienen en 12 paneles (50 pies cuadrados) por caja. Cada caja pesa aproximadamente 35 libras, entonces se puede llevar fácilmente al tejado para la instalación.

Después de completar todo el trabajo preparatorio y los accesorios han sido aplicado, puede empezar a instalar los entrepaños. Siempre instale entrepaños de izquierda a derecha y fijarse con 5 shingle clips por cada entrepaños. El primero y el último clip en cada fila de entrepaños debe tijeretazar (snip) en el área de gancho por el flange de arriba del clip de entrepaños. Este procedimiento ayudará a fijar la fila y minimizar el movimiento horizontal de los entrepaños. (vea la detalle #1 de abajo)

Empiece la instalación de entrepaños en la esquina del inferior de la izquierda del tejado con un panel completo. Después de instalar varios paneles, puede empezar la segunda fila.

Hay dimples estampados en el gancho del parte superior de cada entrepaños. Como se nota de arriba, han sido diseñado “1”, “3”, “4”, y “2”. No empiece la segunda fila con un entrepaños completo. En un esfuerzo a crear una vista escogida al azar tambaleo, se recomienda a cortar el primer entrepañosdel segundo nivel en dimple “2”. Puede continuar instalando entrepaños en esta fila usando solamente entrepaños completas. Puede empezar la tercera fila por cortar el primer entrepaños en dimple “3” y instalarlo. La cuarta fila debe empezar con un entrepaños cortado en dimple “4”. La quinta fila debe empezar con un entrepaños completo y debe repetir el procedimiento de tambaleo de arriba en todas las filas.

Cuando está instalando entrepaños en caderas o valles, asegúrese de seguir el procedimiento de cortar arriba indicada para asegurar el mismo modelo irregular.

PÁGINA 10

Hip/Ridge Assembly (Detalle G) (non-vented)

Corte shingle-shakes a la longitud correcta y instalar lo más cerca que sea posible a la cadera o el ridgeline. Cubra las orillas cortadas con 6” del protector de hielo y agua, centrado por toda la longitud de la cadera o el ridge edge. Doble starter base con 10’ freno al grado de inclinación correcta. Aplique sellador de espuma por toda la longitud del starter base, aproximadamente 4” de las dos bordes de la esquina. Instale starter base por el shingle-shake y superponga los trozos siguientes aproximadamente 4” usando sellador. The hip/ridge caps deben instalarse con el starter base con #10 x 1 1/2” tornillos de acero de zip usando dos shingle clips por cada hip/ridge cap.

PÁGINA 11

Hip/Ridge Assembly (detalle G) (vented)

(1) Cuando use el sistema de ventilación de Quarrix, primero corte aberturas de 2” por la cubierta del tejado, no más cerca a 6” de las paredes finales. (Vea los requísitos de ventilación de Ridge and Soffit en la página 12). Cuando esté abriendo caderas para más movimiento de aire, no baje de la parte más alta más de 1/3. Bajarse demasiado de la cresta tiene efecto en el movimiento del aire.

(2) Ponga la abertura (con espuma) toda la longitud de la cresta, coincidiendo con el grado de inclinación. Fíjese con tachuelas y use sellador cuando sea necesario.

(3) Doble starter base al grado de inclinación correcto, superponiendo 4” de splices. Use #10 x 2” tornillos de acero zip, espaciado 12” para que el sistema de abertura sea plano.

PÁGINA 12

Requísitos de ventilación de Ridge y Soffit

Los cálculos están basados en la ventilación igual en el borde y en los aleros. Esto requiere una proporción de 1:300. (Un pie cuadrado de ventilación a cada 300 pies cuadrados de espacio en el entretecho) (Busque los códigos locales de edificios exactos en su ubicación)

Este cálculo es para 50% del borde y 50% en el soffit. OJO: Las aberturas de orilla y soffit deben ser igual al otro. Se recomienda que los aleros tengan un añadido de 10% a 25%, esto aumenta la presión del aire.

PÁGINA 13

Roof vent flashing

Se recomienda sustituir todas las aberturas del tejado con el sistema de aberturas de Quarrix. (Vea la página 10) No mezclen las aberturas de Quarrix con otras marcas.

Si se utilicen aberturas para ventilar el ático, se debe prestar atención a escoger suficientes aberturas de tejado del tamaño apropiado. Esta abertura debe tener fijado metal flashing y debe seguir todas las recomendaciones de instalación del fabricante. Los metal flashings en las aberturas deben ser preparados para asegurar una instalación impermeable. Use tornillos pintados zip para instalar, también con un sellador bajo flashing y en todos lados de las aberturas.

Pipe vent flashing

Escoja canerias de aberturas del tamaño apropiado (que vaya bien es muy importante) con metal or rubber boot flashing. Sigue las directrices de instalación del fabricante y use bastante sellador para asegurar un ajuste impermeable. Use tornillos pintados de zip para instalar, también con sellador debajo de flashing y en todos lados de abertura.

PÁGINA 14

Roof jack

Importante

Vea las instrucciones del colgador del fabricante para el uso apropiado y las instrucciones requeridas del montaje.

Estas instrucciones muestran la modificación de la teja

1. Monte el colgador sobre la teja como se muestra en el dibujo.
2. Monta la teja de encima con clips
3. Quítese el colgador cuando haya terminado de instalar las tejas
4. Ponga una placa delgada de protección debajo de la parte trasera de la teja. Levante la parte trasera con un martillo en cada lado de la del tab cuando se dé forma con la mano. Haga el remate con un instrumento estrecho que no deje marcas.

EDCO
Roofing and Accessories

CERus-1037

Shake Panel - Solid or Enhanced
50"x 12"– 12 pcs / ctn
50 sq ft coverage

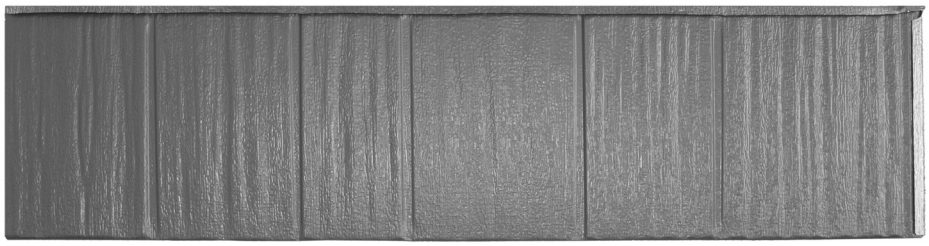

Shake Ridge/Hip Cap Standard or Enhanced
20 pcs / ctn

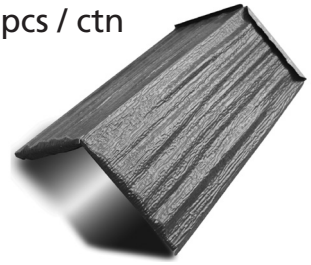

Slate Panel - Solid or Enhanced
50" x 12" – 12 pcs / ctn
50 sq ft coverage

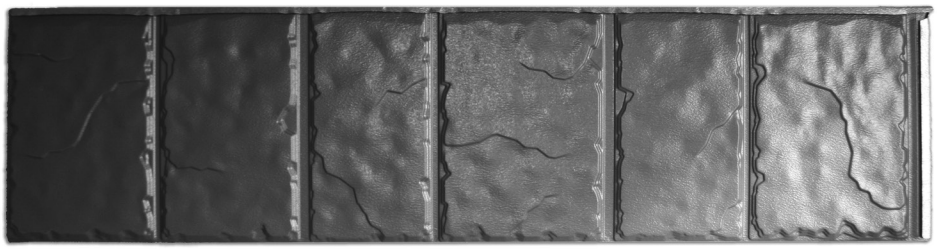

Slate Ridge/Hip Cap Standard or Enhanced
20 pcs / ctn

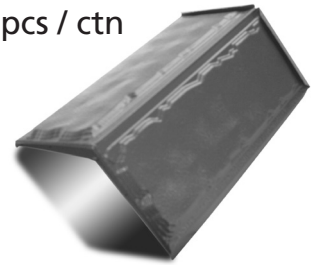

Eave Starter
10’ long

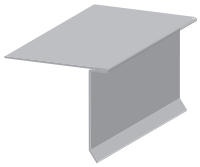

7/8” J-Trim
10’ long

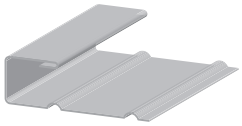

Open Valley Starter
10’ long

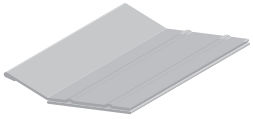

Valley Flashing
10’ long

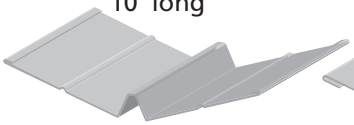

Valley Cap
10’ long

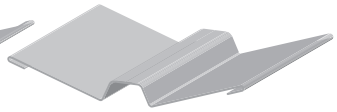

End Wall Flashing
10’ long

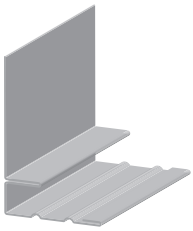

Head Wall Flashing
10’ long

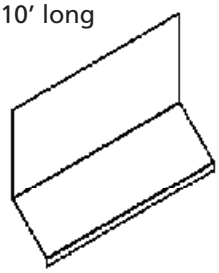

Shingle Clip
Valley Clip
600 / ctn
.024” G90

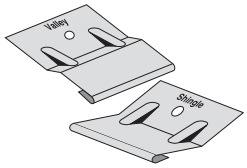

Quarrix Ridge Vent
10’ long
w/foam

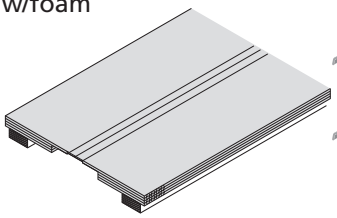

Starter Base
10’ long

Starter Base w/Foam

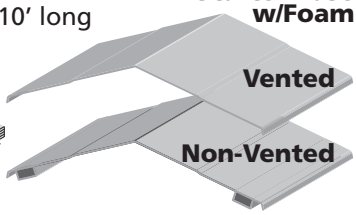

Trim Coil
14 1/4” x 50’

Rake Starter
10’ long

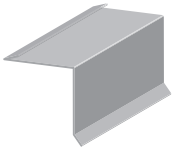

Sno Gem
100 / ctn

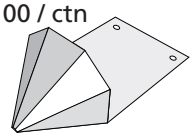

Zip Screws
Painted / Mill Finish
4 sizes

Touch-Up Paint
.5 oz

Foam Seal
20’ long

MRA METAL ROOFING ALLIANCE

NATIONAL COIL COATERS ASSOCIATION

All accessories are velvet embossed.
For more information, please call 800-333-2580.